00025439

THE
ASIATIC SOCIETY OF BOMBAY
Town Hall, Bombay.

00025439
Digitized with financial assistance from
HT Parekh FOUNDATION
An Initiative by HDFC
WITH YOU, RIGHT THROUGH
on 15 October, 2018

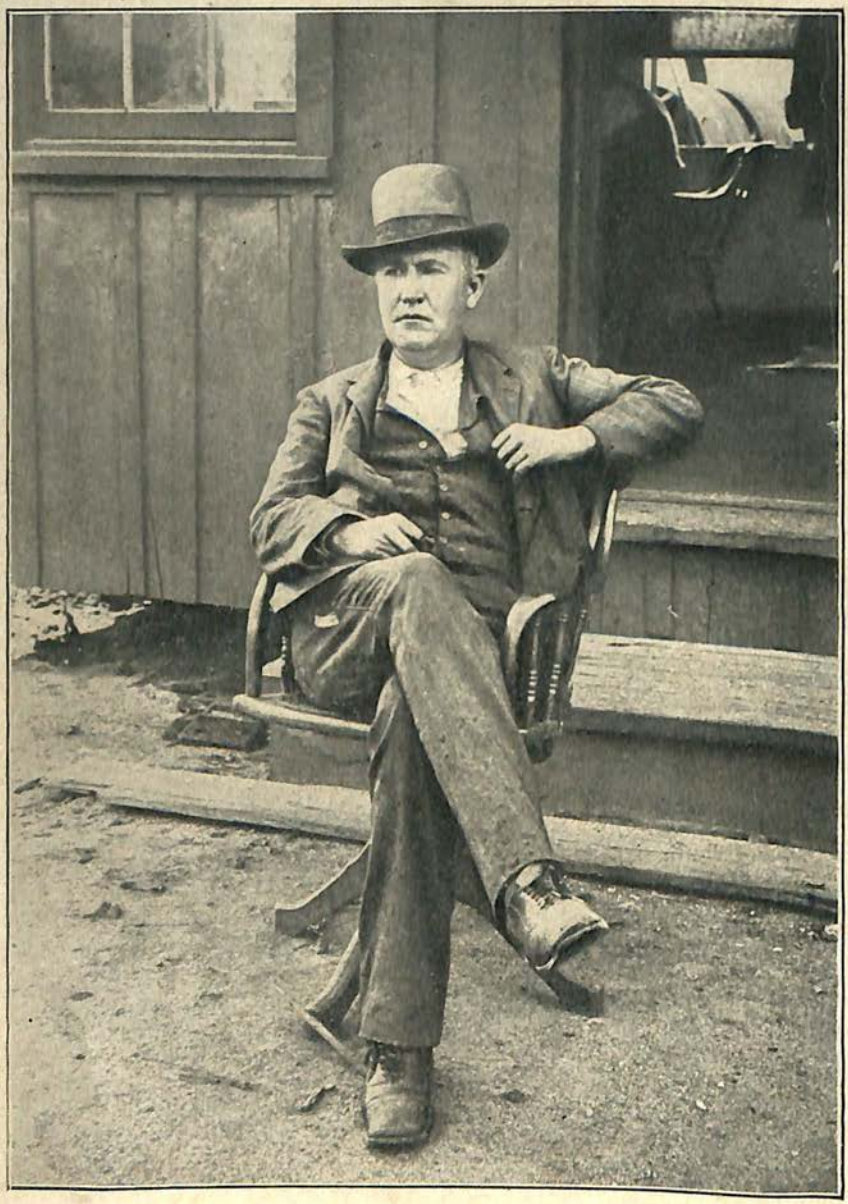

EDISON AT THE OFFICE DOOR OF THE ORE-CONCENTRATING PLANT AT EDISON, NEW JERSEY, IN THE NINETIES

EDISON

HIS LIFE AND INVENTIO

BY

FRANK LEWIS DYER
GENERAL COUNSEL FOR THE EDISON LABORATORY
AND ALLIED INTERESTS

AND

THOMAS COMMERFORD MARTIN
EX-PRESIDENT OF THE AMERICAN INSTITUTE
OF ELECTRICAL ENGINEERS

IN TWO VOLUMES

ILLUSTRATED

VOL. II

925.37
Edi/Dye/Edi
25439

Copyright, 1910, by HARPER & BROTHERS

Published November, 1910
Printed in the United States of America

CONTENTS

CHAP.		PAGE
XIX.	Magnetic Ore Milling Work	473
XX.	Edison Portland Cement	506
XXI.	Motion Pictures	527
XXII.	The Development of the Edison Storage Battery	551
XXIII.	Miscellaneous Inventions	573
XXIV.	Edison's Method in Inventing	596
XXV.	The Laboratory at Orange and the Staff	629
XXVI.	Edison in Commerce and Manufacture	660
XXVII.	The Value of Edison's Inventions to the World	682
XXVIII.	The Black Flag	706
XXIX.	The Social Side of Edison	741
	Appendix	785
	List of United States Patents	943
	Foreign Patents	971
	Index	973

ILLUSTRATIONS

EDISON AT THE OFFICE DOOR OF THE ORE-CONCENTRATING PLANT AT EDISON, NEW JERSEY, IN THE NINETIES . . . . . *Frontispiece*

MR. EDISON AND A GROUP OF MOTION-PICTURE MEN CAUGHT BY THE MOTION-PICTURE CAMERA IN THE ENJOYMENT OF A JOKE—DECEMBER 18, 1909 . . *Facing p.* 544

MR. EDISON LAUGHINGLY PROTESTING—DECEMBER 18, 1909 . . . . . " 550

MR. EDISON BUSY WRITING—DECEMBER 18, 1909 .

EDISON AT WORK IN ONE OF THE CHEMICAL ROOMS AT THE ORANGE LABORATORY . . . . . " 592

EDISON AT THE DRAUGHTING-BOARD . . . . . " 618

SOME OF THE MEDALS AND DECORATIONS AWARDED TO EDISON . . . . . " 770

MR. EDISON AND PROFESSOR STEINMETZ IN CONVERSATION—BRIARCLIFF MANOR, SEPTEMBER 2, 1909 . " 774

EDISON IN THE GARDEN OF HIS FLORIDA HOME . . " 778

EDISON

HIS LIFE AND INVENTIONS

EDISON

HIS LIFE AND INVENTIONS

CHAPTER XIX

MAGNETIC ORE MILLING WORK

DURING the Hudson-Fulton celebration of October, 1909, Burgomaster Van Leeuwen, of Amsterdam, member of the delegation sent officially from Holland to escort the *Half Moon* and participate in the functions of the anniversary, paid a visit to the Edison laboratory at Orange to see the inventor, who may be regarded as pre-eminent among those of Dutch descent in this country. Found, as usual, hard at work—this time on his cement house, of which he showed the iron molds—Edison took occasion to remark that if he had achieved anything worth while, it was due to the obstinacy and pertinacity he had inherited from his forefathers. To which it may be added that not less equally have the nature of inheritance and the quality of atavism been exhibited in his extraordinary predilection for the miller's art. While those Batavian ancestors on the low shores of the Zuyder Zee devoted their energies to grinding grain, he has been not less assiduous than they in reducing the rocks of the earth itself to flour.

Although this phase of Mr. Edison's diverse activities is not as generally known to the world as many others of a more popular character, the milling of low-grade auriferous ores and the magnetic separation of iron ores have been subjects of engrossing interest and study to him for many years. Indeed, his comparatively unknown enterprise of separating magnetically and putting into commercial form low-grade iron ore, as carried on at Edison, New Jersey, proved to be the most colossal experiment that he has ever made.

If a person qualified to judge were asked to answer categorically as to whether or not that enterprise was a failure, he could truthfully answer both yes and no. Yes, in that circumstances over which Mr. Edison had no control compelled the shutting down of the plant at the very moment of success; and no, in that the mechanically successful and commercially practical results obtained, after the exercise of stupendous efforts and the expenditure of a fortune, are so conclusive that they must inevitably be the reliance of many future iron-masters. In other words, Mr. Edison was at least a quarter of a century ahead of the times in the work now to be considered.

Before proceeding to a specific description of this remarkable enterprise, however, let us glance at an early experiment in separating magnetic iron sands on the Atlantic sea-shore: "Some years ago I heard one day that down at Quogue, Long Island, there were immense deposits of black magnetic sand. This would be very valuable if the iron could be separated from the sand. So I went down to Quogue with one

of my assistants and saw there for miles large beds of black sand on the beach in layers from one to six inches thick—hundreds of thousands of tons. My first thought was that it would be a very easy matter to concentrate this, and I found I could sell the stuff at a good price. I put up a small plant, but just as I got it started a tremendous storm came up, and every bit of that black sand went out to sea. During the twenty-eight years that have intervened it has never come back." This incident was really the prelude to the development set forth in this chapter.

In the early eighties Edison became familiar with the fact that the Eastern steel trade was suffering a disastrous change, and that business was slowly drifting westward, chiefly by reason of the discovery and opening up of enormous deposits of high-grade iron ore in the upper peninsula of Michigan. This ore could be excavated very cheaply by means of improved mining facilities, and transported at low cost to lake ports. Hence the iron and steel mills east of the Alleghanies—compelled to rely on limited local deposits of Bessemer ore, and upon foreign ores which were constantly rising in value—began to sustain a serious competition with Western mills, even in Eastern markets.

Long before this situation arose, it had been recognized by Eastern iron-masters that sooner or later the deposits of high-grade ore would be exhausted, and, in consequence, there would ensue a compelling necessity to fall back on the low-grade magnetic ores. For many years it had been a much-discussed question how to make these ores available for transporta-

tion to distant furnaces. To pay railroad charges on ores carrying perhaps 80 to 90 per cent. of useless material would be prohibitive. Hence the elimination of the worthless "gangue" by concentration of the iron particles associated with it, seemed to be the only solution of the problem.

Many attempts had been made in by-gone days to concentrate the iron in such ores by water processes, but with only a partial degree of success. The impossibility of obtaining a uniform concentrate was a most serious objection, had there not indeed been other difficulties which rendered this method commercially impracticable. It is quite natural, therefore, that the idea of magnetic separation should have occurred to many inventors. Thus we find numerous instances throughout the last century of experiments along this line; and particularly in the last forty or fifty years, during which various attempts have been made by others than Edison to perfect magnetic separation and bring it up to something like commercial practice. At the time he took up the matter, however, no one seems to have realized the full meaning of the tremendous problems involved.

From 1880 to 1885, while still very busy in the development of his electric-light system, Edison found opportunity to plan crushing and separating machinery. His first patent on the subject was applied for and issued early in 1880. He decided, after mature deliberation, that the magnetic separation of low-grade ores on a colossal scale at a low cost was the only practical way of supplying the furnaceman with a high quality of iron ore. It was his opinion

that it was cheaper to quarry and concentrate lean ore in a big way than to attempt to mine, under adverse circumstances, limited bodies of high-grade ore. He appreciated fully the serious nature of the gigantic questions involved; and his plans were laid with a view to exercising the utmost economy in the design and operation of the plant in which he contemplated the automatic handling of many thousands of tons of material daily. It may be stated as broadly true that Edison engineered to handle immense masses of stuff automatically, while his predecessors aimed chiefly at close separation.

Reduced to its barest, crudest terms, the proposition of magnetic separation is simplicity itself. A piece of the ore (magnetite) may be reduced to powder and the ore particles separated therefrom by the help of a simple hand magnet. To elucidate the basic principle of Edison's method, let the crushed ore fall in a thin stream past such a magnet. The magnetic particles are attracted out of the straight line of the falling stream, and being heavy, gravitate inwardly and fall to one side of a partition placed below. The non-magnetic gangue descends in a straight line to the other side of the partition. Thus a complete separation is effected.

Simple though the principle appears, it was in its application to vast masses of material and in the solving of great engineering problems connected therewith that Edison's originality made itself manifest in the concentrating works that he established in New Jersey, early in the nineties. Not only did he develop thoroughly the refining of the crushed ore, so

that after it had passed the four hundred and eighty magnets in the mill, the concentrates came out finally containing 91 to 93 per cent. of iron oxide, but he also devised collateral machinery, methods and processes all fundamental in their nature. These are too numerous to specify in detail, as they extended throughout the various ramifications of the plant, but the principal ones are worthy of mention, such as:

The giant rolls (for crushing).
Intermediate rolls.
Three-high rolls.
Giant cranes (215 feet long span).
Vertical dryer.
Belt conveyors.
Air separation.
Mechanical separation of phosphorus.
Briquetting.

That Mr. Edison's work was appreciated at the time is made evident by the following extract from an article describing the Edison plant, published in *The Iron Age* of October 28, 1897; in which, after mentioning his struggle with adverse conditions, it says: "There is very little that is showy, from the popular point of view, in the gigantic work which Mr. Edison has done during these years, but to those who are capable of grasping the difficulties encountered, Mr. Edison appears in the new light of a brilliant constructing engineer grappling with technical and commercial problems of the highest order. His genius as an inventor is revealed in many details of the great concentrating plant. . . . But to our mind,

originality of the highest type as a constructor and designer appears in the bold way in which he sweeps aside accepted practice in this particular field and attains results not hitherto approached. He pursues methods in ore-dressing at which those who are trained in the usual practice may well stand aghast. But considering the special features of the problems to be solved, his methods will be accepted as those economically wise and expedient."

A cursory glance at these problems will reveal their import. Mountains must be reduced to dust; all this dust must be handled in detail, so to speak, and from it must be separated the fine particles of iron constituting only one-fourth or one-fifth of its mass; and then this iron-ore dust must be put into such shape that it could be commercially shipped and used. One of the most interesting and striking investigations made by Edison in this connection is worthy of note, and may be related in his own words: "I felt certain that there must be large bodies of magnetite in the East, which if crushed and concentrated would satisfy the wants of the Eastern furnaces for steel-making. Having determined to investigate the mountain regions of New Jersey, I constructed a very sensitive magnetic needle, which would dip toward the earth if brought over any considerable body of magnetic iron ore. One of my laboratory assistants went out with me and we visited many of the mines of New Jersey, but did not find deposits of any magnitude. One day, however, as we drove over a mountain range, not known as iron-bearing land, I was astonished to find that the needle was strongly attracted

and remained so; thus indicating that the whole mountain was underlaid with vast bodies of magnetic ore.

"I knew it was a commercial problem to produce high-grade Bessemer ore from these deposits, and took steps to acquire a large amount of the property. I also planned a great magnetic survey of the East, and I believe it remains the most comprehensive of its kind yet performed. I had a number of men survey a strip reaching from Lower Canada to North Carolina. The only instrument we used was the special magnetic needle. We started in Lower Canada and travelled across the line of march twenty-five miles; then advanced south one thousand feet; then back across the line of march again twenty-five miles; then south another thousand feet, across again, and so on. Thus we advanced all the way to North Carolina, varying our cross-country march from two to twenty-five miles, according to geological formation. Our magnetic needle indicated the presence and richness of the invisible deposits of magnetic ore. We kept minute records of these indications, and when the survey was finished we had exact information of the deposits in every part of each State we had passed through. We also knew the width, length, and approximate depth of every one of these deposits, which were enormous.

"The amount of ore disclosed by this survey was simply fabulous. How much so may be judged from the fact that in the three thousand acres immediately surrounding the mills that I afterward established at Edison there were over 200,000,000 tons of low-grade ore. I also secured sixteen thousand acres in

which the deposit was proportionately as large. These few acres alone contained sufficient ore to supply the whole United States iron trade, including exports, for seventy years."

Given a mountain of rock containing only one-fifth to one-fourth magnetic iron, the broad problem confronting Edison resolved itself into three distinct parts—first, to tear down the mountain bodily and grind it to powder; second, to extract from this powder the particles of iron mingled in its mass; and, third, to accomplish these results at a cost sufficiently low to give the product a commercial value.

Edison realized from the start that the true solution of this problem lay in the continuous treatment of the material, with the maximum employment of natural forces and the minimum of manual labor and generated power. Hence, all his conceptions followed this general principle so faithfully and completely that we find in the plant embodying his ideas the forces of momentum and gravity steadily in harness and keeping the traces taut; while there was no touch of the human hand upon the material from the beginning of the treatment to its finish—the staff being employed mainly to keep watch on the correct working of the various processes.

It is hardly necessary to devote space to the beginnings of the enterprise, although they are full of interest. They served, however, to convince Edison that if he ever expected to carry out his scheme on the extensive scale planned, he could not depend upon the market to supply suitable machinery

for important operations, but would be obliged to devise and build it himself. Thus, outside the steam-shovel and such staple items as engines, boilers, dynamos, and motors, all of the diverse and complex machinery of the entire concentrating plant, as subsequently completed, was devised by him especially for the purpose. The necessity for this was due to the many radical variations made from accepted methods.

No such departure was as radical as that of the method of crushing the ore. Existing machinery for this purpose had been designed on the basis of mining methods then in vogue, by which the rock was thoroughly shattered by means of high explosives and reduced to pieces of one hundred pounds or less. These pieces were then crushed by power directly applied. If a concentrating mill, planned to treat five or six thousand tons per day, were to be operated on this basis the investment in crushers and the supply of power would be enormous, to say nothing of the risk of frequent breakdowns by reason of multiplicity of machinery and parts. From a consideration of these facts, and with his usual tendency to upset traditional observances, Edison conceived the bold idea of constructing gigantic rolls which, by the force of momentum, would be capable of crushing individual rocks of vastly greater size than ever before attempted. He reasoned that the advantages thus obtained would be fourfold: a minimum of machinery and parts; greater compactness; a saving of power; and greater economy in mining. As this last-named operation precedes the crushing, let us first consider it as it was projected and carried on by him.

Perhaps quarrying would be a better term than mining in this case, as Edison's plan was to approach the rock and tear it down bodily. The faith that "moves mountains" had a new opportunity. In work of this nature it had been customary, as above stated, to depend upon a high explosive, such as dynamite, to shatter and break the ore to lumps of one hundred pounds or less. This, however, he deemed to be a most uneconomical process, for energy stored as heat units in dynamite at $260 per ton was much more expensive than that of calories in a ton of coal at $3 per ton. Hence, he believed that only the minimum of work should be done with the costly explosive; and, therefore, planned to use dynamite merely to dislodge great masses of rock, and depended upon the steam-shovel, operated by coal under the boiler, to displace, handle, and remove the rock in detail. This was the plan that was subsequently put into practice in the great works at Edison, New Jersey. A series of three-inch holes twenty feet deep were drilled eight feet apart, about twelve feet back of the ore-bank, and into these were inserted dynamite cartridges. The blast would dislodge thirty to thirty-five thousand tons of rock, which was scooped up by great steam-shovels and loaded on to skips carried by a line of cars on a narrow-gauge railroad running to and from the crushing mill. Here the material was automatically delivered to the giant rolls. The problem included handling and crushing the "run of the mine," without selection. The steam-shovel did not discriminate, but picked up handily single pieces weighing five or six tons and loaded them on

the skips with quantities of smaller lumps. When the skips arrived at the giant rolls, their contents were dumped automatically into a superimposed hopper. The rolls were well named, for with ear-splitting noise they broke up in a few seconds the great pieces of rock tossed in from the skips.

It is not easy to appreciate to the full the daring exemplified in these great crushing rolls, or rather "rock-crackers," without having watched them in operation delivering their "solar-plexus" blows. It was only as one might stand in their vicinity and hear the thunderous roar accompanying the smashing and rending of the massive rocks as they disappeared from view that the mind was overwhelmed with a sense of the magnificent proportions of this operation. The enormous force exerted during this process may be illustrated from the fact that during its development, in running one of the early forms of rolls, pieces of rock weighing more than half a ton would be shot up in the air to a height of twenty or twenty-five feet.

The giant rolls were two solid cylinders, six feet in diameter and five feet long, made of cast iron. To the faces of these rolls were bolted a series of heavy, chilled-iron plates containing a number of projecting knobs two inches high. Each roll had also two rows of four-inch knobs, intended to strike a series of hammer-like blows. The rolls were set face to face fourteen inches apart, in a heavy frame, and the total weight was one hundred and thirty tons, of which seventy tons were in moving parts. The space between these two rolls allowed pieces of rock measuring

less than fourteen inches to descend to other smaller rolls placed below. The giant rolls were belt-driven, in opposite directions, through friction clutches, although the belt was not depended upon for the actual crushing. Previous to the dumping of a skip, the rolls were speeded up to a circumferential velocity of nearly a mile a minute, thus imparting to them the terrific momentum that would break up easily in a few seconds boulders weighing five or six tons each. It was as though a rock of this size had got in the way of two express trains travelling in opposite directions at nearly sixty miles an hour. In other words, it was the kinetic energy of the rolls that crumbled up the rocks with pile-driver effect. This sudden strain might have tended to stop the engine driving the rolls; but by an ingenious clutch arrangement the belt was released at the moment of resistance in the rolls by reason of the rocks falling between them. The act of breaking and crushing would naturally decrease the tremendous momentum, but after the rock was reduced and the pieces had passed through, the belt would again come into play, and once more speed up the rolls for a repetition of their regular prize-fighter duty.

On leaving the giant rolls the rocks, having been reduced to pieces not larger than fourteen inches, passed into the series of "Intermediate Rolls" of similar construction and operation, by which they were still further reduced, and again passed on to three other sets of rolls of smaller dimensions. These latter rolls were also face-lined with chilled-iron plates; but, unlike the larger ones, were positively driven, reducing

the rock to pieces of about one-half-inch size, or smaller. The whole crushing operation of reduction from massive boulders to small pebbly pieces having been done in less time than the telling has occupied, the product was conveyed to the "Dryer," a tower nine feet square and fifty feet high, heated from below by great open furnace fires. All down the inside walls of this tower were placed cast-iron plates, nine feet long and seven inches wide, arranged alternately in "fish-ladder" fashion. The crushed rock, being delivered at the top, would fall down from plate to plate, constantly exposing different surfaces to the heat, until it landed completely dried in the lower portion of the tower, where it fell into conveyors which took it up to the stock-house.

This method of drying was original with Edison. At the time this adjunct to the plant was required, the best dryer on the market was of a rotary type, which had a capacity of only twenty tons per hour, with the expenditure of considerable power. As Edison had determined upon treating two hundred and fifty tons or more per hour, he decided to devise an entirely new type of great capacity, requiring a minimum of power (for elevating the material), and depending upon the force of gravity for handling it during the drying process. A long series of experiments resulted in the invention of the tower dryer with a capacity of three hundred tons per hour.

The rock, broken up into pieces about the size of marbles, having been dried and conveyed to the stock-house, the surplusage was automatically carried out from the other end of the stock-house by con-

veyors, to pass through the next process, by which it was reduced to a powder. The machinery for accomplishing this result represents another interesting and radical departure of Edison from accepted usage. He had investigated all the crushing-machines on the market, and tried all he could get. He found them all greatly lacking in economy of operation; indeed, the highest results obtainable from the best were 18 per cent. of actual work, involving a loss of 82 per cent. by friction. His nature revolted at such an immense loss of power, especially as he proposed the crushing of vast quantities of ore. Thus, he was obliged to begin again at the foundation, and he devised a crushing-machine which was subsequently named the "Three-High Rolls," and which practically reversed the above figures, as it developed 84 per cent. of work done with only 16 per cent. loss in friction.

A brief description of this remarkable machine will probably interest the reader. In the two end pieces of a heavy iron frame were set three rolls, or cylinders —one in the centre, another below, and the other above—all three being in a vertical line. These rolls were of cast iron three feet in diameter, having chilled-iron smooth face-plates of considerable thickness. The lowest roll was set in a fixed bearing at the bottom of the frame, and, therefore, could only turn around on its axis. The middle and top rolls were free to move up or down from and toward the lower roll, and the shafts of the middle and upper rolls were set in a loose bearing which could slip up and down in the iron frame. It will be apparent, therefore, that any material which passed in between

the top and the middle rolls, and the middle and bottom rolls, could be ground as fine as might be desired, depending entirely upon the amount of pressure applied to the loose rolls. In operation the material passed first through the upper and middle rolls, and then between the middle and lowest rolls.

This pressure was applied in a most ingenious manner. On the ends of the shafts of the bottom and top rolls there were cylindrical sleeves, or bearings, having seven sheaves, in which was run a half-inch endless wire rope. This rope was wound seven times over the sheaves as above, and led upward and over a single-groove sheave which was operated by the piston of an air cylinder, and in this manner the pressure was applied to the rolls. It will be seen, therefore, that the system consisted in a single rope passed over sheaves and so arranged that it could be varied in length, thus providing for elasticity in exerting pressure and regulating it as desired. The efficiency of this system was incomparably greater than that of any other known crusher or grinder, for while a pressure of one hundred and twenty-five thousand pounds could be exerted by these rolls, friction was almost entirely eliminated because the upper and lower roll bearings turned with the rolls and revolved in the wire rope, which constituted the bearing proper.

The same cautious foresight exercised by Edison in providing a safety device — the fuse — to prevent fires in his electric-light system, was again displayed in this concentrating plant, where, to save possible injury to its expensive operating parts, he devised an analogous factor, providing all the crush-

ing machinery with closely calculated "safety pins," which, on being overloaded, would shear off and thus stop the machine at once.

The rocks having thus been reduced to fine powder, the mass was ready for screening on its way to the magnetic separators. Here again Edison reversed prior practice by discarding rotary screens and devising a form of tower screen, which, besides having a very large working capacity by gravity, eliminated all power except that required to elevate the material. The screening process allowed the finest part of the crushed rock to pass on, by conveyor belts, to the magnetic separators, while the coarser particles were in like manner automatically returned to the rolls for further reduction.

In a narrative not intended to be strictly technical, it would probably tire the reader to follow this material in detail through the numerous steps attending the magnetic separation. These may be seen in a diagram reproduced from the above-named article in the *Iron Age*, and supplemented by the following extract from the *Electrical Engineer*, New York, October 28, 1897: "At the start the weakest magnet at the top frees the purest particles, and the second takes care of others; but the third catches those to which rock adheres, and will extract particles of which only one-eighth is iron. This batch of material goes back for another crushing, so that everything is subjected to an equality of refining. We are now in sight of the real 'concentrates,' which are conveyed to dryer No. 2 for drying again, and are then delivered to the fifty-mesh screens. Whatever is fine enough

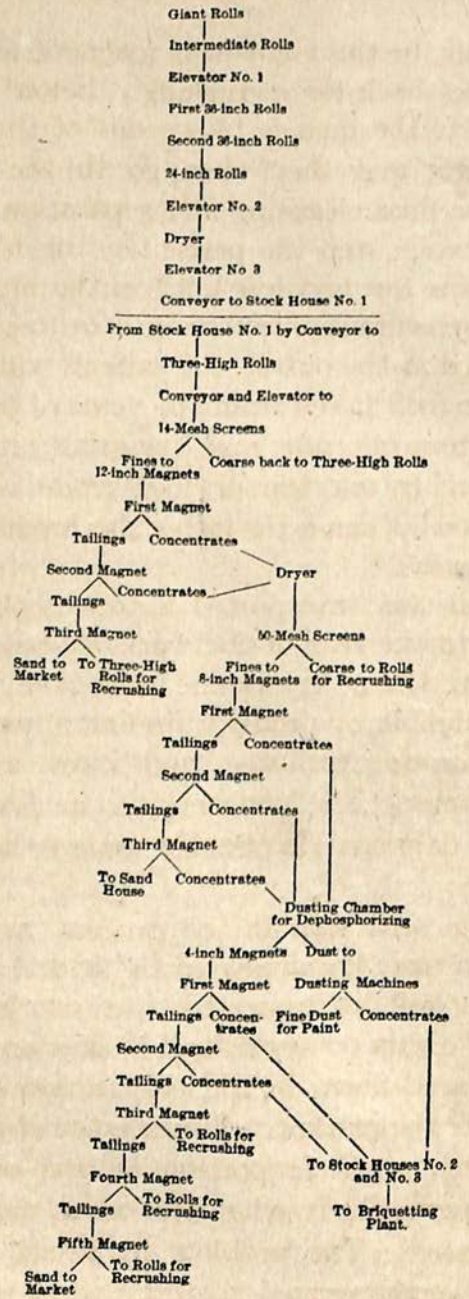
Giant Rolls
Intermediate Rolls
Elevator No. 1
First 36-inch Rolls
Second 36-inch Rolls
24-inch Rolls
Elevator No. 2
Dryer
Elevator No. 3
Conveyor to Stock House No. 1
From Stock House No. 1 by Conveyor to
Three-High Rolls
Conveyor and Elevator to
14-Mesh Screens
Fines to 12-inch Magnets
Coarse back to Three-High Rolls
First Magnet
Tailings
Concentrates
Second Magnet
Dryer
Concentrates
Tailings
Third Magnet
50-Mesh Screens
Sand to Market
To Three-High Rolls for Recrushing
Fines to 8-inch Magnets
Coarse to Rolls for Recrushing
First Magnet
Tailings
Concentrates
Second Magnet
Tailings
Concentrates
Third Magnet
To Sand House
Concentrates
Dusting Chamber for Dephosphorizing
4-inch Magnets
Dust to
First Magnet
Dusting Machines
Tailings
Concentrates
Fine Dust for Paint
Concentrates
Second Magnet
Tailings
Concentrates
Third Magnet
Tailings
To Rolls for Recrushing
To Stock Houses No. 2 and No. 3
Fourth Magnet
Tailings
To Rolls for Recrushing
To Briquetting Plant.
Fifth Magnet
Sand to Market
To Rolls for Recrushing

goes through to the eight-inch magnets, and the remainder goes back for recrushing. Below the eight-inch magnets the dust is blown out of the particles mechanically, and they then go to the four-inch magnets for final cleansing and separation. . . . Obviously, at each step the percentage of felspar and phosphorus is less and less until in the final concentrates the percentage of iron oxide is 91 to 93 per cent. As intimated at the outset, the tailings will be 75 per cent. of the rock taken from the veins of ore, so that every four tons of crude, raw, low-grade ore will have yielded roughly one ton of high-grade concentrate and three tons of sand, the latter also having its value in various ways."

This sand was transported automatically by belt conveyors to the rear of the works to be stored and sold. Being sharp, crystalline, and even in quality, it was a valuable by-product, finding a ready sale for building purposes, railway sand-boxes, and various industrial uses. The concentrate, in fine powdery form, was delivered in similar manner to a stock-house.

As to the next step in the process, we may now quote again from the article in the *Iron Age:* "While Mr. Edison and his associates were working on the problem of cheap concentration of iron ore, an added difficulty faced them in the preparation of the concentrates for the market. Furnacemen object to more than a very small proportion of fine ore in their mixtures, particularly when the ore is magnetic, not easily reduced. The problem to be solved was to market an agglomerated material so as to avoid the

drawbacks of fine ore. The agglomerated product must be porous so as to afford access of the furnace-reducing gases to the ore. It must be hard enough to bear transportation, and to carry the furnace burden without crumbling to pieces. It must be waterproof, to a certain extent, because considerations connected with securing low rates of freight make it necessary to be able to ship the concentrates to market in open coal cars, exposed to snow and rain. In many respects the attainment of these somewhat conflicting ends was the most perplexing of the problems which confronted Mr. Edison. The agglomeration of the concentrates having been decided upon, two other considerations, not mentioned above, were of primary importance—first, to find a suitable cheap binding material; and, second, its nature must be such that very little would be necessary per ton of concentrates. These severe requirements were staggering, but Mr. Edison's courage did not falter. Although it seemed a well-nigh hopeless task, he entered upon the investigation with his usual optimism and vim. After many months of unremitting toil and research, and the trial of thousands of experiments, the goal was reached in the completion of a successful formula for agglomerating the fine ore and pressing it into briquettes by special machinery."

This was the final process requisite for the making of a completed commercial product. Its practice, of course, necessitated the addition of an entirely new department of the works, which was carried into effect by the construction and installation of the novel mixing and briquetting machinery, together with ex-

tensions of the conveyors, with which the plant had already been liberally provided.

Briefly described, the process consisted in mixing the concentrates with the special binding material in machines of an entirely new type, and in passing the resultant pasty mass into the briquetting machines, where it was pressed into cylindrical cakes three inches in diameter and one and a half inches thick, under successive pressures of 7800, 14,000, and 60,000 pounds. Each machine made these briquettes at the rate of sixty per minute, and dropped them into bucket conveyors by which they were carried into drying furnaces, through which they made five loops, and were then delivered to cross-conveyors which carried them into the stock-house. At the end of this process the briquettes were so hard that they would not break or crumble in loading on the cars or in transportation by rail, while they were so porous as to be capable of absorbing 26 per cent. of their own volume in alcohol, but repelling water absolutely—perfect "old soaks."

Thus, with never-failing persistence and patience, coupled with intense thought and hard work, Edison met and conquered, one by one, the complex difficulties that confronted him. He succeeded in what he had set out to do, and it is now to be noted that the product he had striven so sedulously to obtain was a highly commercial one, for not only did the briquettes of concentrated ore fulfil the purpose of their creation, but in use actually tended to increase the working capacity of the furnace, as the following test, quoted from the *Iron Age*, October

28, 1897, will attest: "The only trial of any magnitude of the briquettes in the blast-furnace was carried through early this year at the Crane Iron Works, Catasauqua, Pennsylvania, by Leonard Peckitt.

"The furnace at which the test was made produces from one hundred to one hundred and ten tons per day when running on the ordinary mixture. The charging of briquettes was begun with a percentage of 25 per cent., and was carried up to 100 per cent. The following is the record of the results:

RESULTS OF WORKING BRIQUETTES AT THE CRANE FURNACE

Date	Quantity of Briquette Working	Tons	Silica	Phosphorus	Sulphur	Manganese
	Per Cent.					
January 5th.....	25	104	2.770	0.830	0.018	0.500
January 6th.....	37½	124½	2.620	0.740	0.018	0.350
January 7th.....	50	138½	2.572	0.580	0.015	0.200
January 8th.....	75	119	1.844	0.264	0.022	0.200
January 9th.....	100	138½	1.712	0.147	0.038	0.185

"On the 9th, at 5 P.M., the briquettes having been nearly exhausted, the percentage was dropped to 25 per cent., and on the 10th the output dropped to 120 tons, and on the 11th the furnace had resumed the usual work on the regular standard ores.

"These figures prove that the yield of the furnace is considerably increased. The Crane trial was too short to settle the question to what extent the increase in product may be carried. This increase in output, of course, means a reduction in the cost of labor and of general expenses.

"The richness of the ore and its purity of course

affect the limestone consumption. In the case of the Crane trial there was a reduction from 30 per cent. to 12 per cent. of the ore charge.

"Finally, the fuel consumption is reduced, which in the case of the Eastern plants, with their relatively costly coke, is a very important consideration. It is regarded as possible that Eastern furnaces will be able to use a smaller proportion of the costlier coke and correspondingly increase in anthracite coal, which is a cheaper fuel in that section. So far as foundry iron is concerned, the experience at Catasauqua, Pennsylvania, brief as it has been, shows that a stronger and tougher metal is made."

Edison himself tells an interesting little story in this connection, when he enjoyed the active help of that noble character, John Fritz, the distinguished inventor and pioneer of the modern steel industry in America. He says: "When I was struggling along with the iron-ore concentration, I went to see several blast-furnace men to sell the ore at the market price. They saw I was very anxious to sell it, and they would take advantage of my necessity. But I happened to go to Mr. John Fritz, of the Bethlehem Steel Company, and told him what I was doing. 'Well,' he said to me, 'Edison, you are doing a good thing for the Eastern furnaces. They ought to help you, for it will help us out. I am willing to help you. I mix a little sentiment with business, and I will give you an order for one hundred thousand tons.' And he sat right down and gave me the order."

The Edison concentrating plant has been sketched in the briefest outline with a view of affording merely

a bare idea of the great work of its projector. To tell the whole story in detail and show its logical sequence, step by step, would take little less than a volume in itself, for Edison's methods, always iconoclastic when progress is in sight, were particularly so at the period in question. It has been said that "Edison's scrap-heap contains the elements of a liberal education," and this was essentially true of the "discard" during the ore-milling experience. Interesting as it might be to follow at length the numerous phases of ingenious and resourceful development that took place during those busy years, the limit of present space forbids their relation. It would, however, be denying the justice that is Edison's due to omit all mention of two hitherto unnamed items in particular that have added to the world's store of useful devices. We refer first to the great travelling hoisting-crane having a span of two hundred and fifteen feet, and used for hoisting loads equal to ten tons, this being the largest of the kind made up to that time, and afterward used as a model by many others. The second item was the ingenious and varied forms of conveyor belt, devised and used by Edison at the concentrating works, and subsequently developed into a separate and extensive business by an engineer to whom he gave permission to use his plans and patterns.

Edison's native shrewdness and knowledge of human nature was put to practical use in the busy days of plant construction. It was found impossible to keep mechanics on account of indifferent residential accommodations afforded by the tiny village, remote from civilization, among the central mountains of

New Jersey. This puzzling question was much discussed between him and his associate, Mr. W. S. Mallory, until finally he said to the latter: "If we want to keep the men here we must make it attractive for the women—so let us build some houses that will have running water and electric lights, and rent at a low rate." He set to work, and in a day finished a design for a type of house. Fifty were quickly built and fully described in advertising for mechanics. Three days' advertisements brought in over six hundred and fifty applications, and afterward Edison had no trouble in obtaining all the first-class men he required, as settlers in the artificial Yosemite he was creating.

We owe to Mr. Mallory a characteristic story of this period as to an incidental unbending from toil, which in itself illustrates the ever-present determination to conquer what is undertaken: "Along in the latter part of the nineties, when the work on the problem of concentrating iron ore was in progress, it became necessary when leaving the plant at Edison to wait over at Lake Hopatcong one hour for a connecting train. During some of these waits Mr. Edison had seen me play billiards. At the particular time this incident happened, Mrs. Edison and her family were away for the summer, and I was staying at the Glenmont home on the Orange Mountains.

"One hot Saturday night, after Mr. Edison had looked over the evening papers, he said to me: 'Do you want to play a game of billiards?' Naturally this astonished me very much, as he is a man who cares little or nothing for the ordinary games, with the single exception of parcheesi, of which he is very fond. I said

I would like to play, so we went up into the billiard-room of the house. I took off the cloth, got out the balls, picked out a cue for Mr. Edison, and when we banked for the first shot I won and started the game. After making two or three shots I missed, and a long carom shot was left for Mr. Edison, the cue ball and object ball being within about twelve inches of each other, and the other ball a distance of nearly the length of the table. Mr. Edison attempted to make the shot, but missed it and said: 'Put the balls back.' So I put them back in the same position and he missed it the second time. I continued at his request to put the balls back in the same position for the next fifteen minutes, until he could make the shot every time—then he said: 'I don't want to play any more.'"

Having taken a somewhat superficial survey of the great enterprise under consideration; having had a cursory glance at the technical development of the plant up to the point of its successful culmination in the making of a marketable, commercial product as exemplified in the test at the Crane Furnace, let us revert to that demonstration and note the events that followed. The facts of this actual test are far more eloquent than volumes of argument would be as a justification of Edison's assiduous labors for over eight years, and of the expenditure of a fortune in bringing his broad conception to a concrete possibility. In the patient solving of tremendous problems he had toiled up the mountain-side of success—scaling its topmost peak and obtaining a view of the boundless prospect. But, alas! "The best laid plans

o' mice and men gang aft agley." The discovery of great deposits of rich Bessemer ore in the Mesaba range of mountains in Minnesota a year or two previous to the completion of his work had been followed by the opening up of those deposits and the marketing of the ore. It was of such rich character that, being cheaply mined by greatly improved and inexpensive methods, the market price of crude ore of like iron units fell from about $6.50 to $3.50 per ton at the time when Edison was ready to supply his concentrated product. At the former price he could have supplied the market and earned a liberal profit on his investment, but at $3.50 per ton he was left without a reasonable chance of competition. Thus was swept away the possibility of reaping the reward so richly earned by years of incessant thought, labor, and care. This great and notable plant, representing a very large outlay of money, brought to completion, ready for business, and embracing some of the most brilliant and remarkable of Edison's inventions and methods, must be abandoned by force of circumstances over which he had no control, and with it must die the high hopes that his progressive, conquering march to success had legitimately engendered.

The financial aspect of these enterprises is often overlooked and forgotten. In this instance it was of more than usual import and seriousness, as Edison was virtually his own "backer," putting into the company almost the whole of all the fortune his inventions had brought him. There is a tendency to deny to the capital that thus takes desperate chances

its full reward if things go right, and to insist that it shall have barely the legal rate of interest and far less than the return of over-the-counter retail trade. It is an absolute fact that the great electrical inventors and the men who stood behind them have had little return for their foresight and courage. In this instance, when the inventor was largely his own financier, the difficulties and perils were redoubled. Let Mr. Mallory give an instance: "During the latter part of the panic of 1893 there came a period when we were very hard up for ready cash, due largely to the panicky conditions; and a large pay-roll had been raised with considerable difficulty. A short time before pay-day our treasurer called me up by telephone, and said: 'I have just received the paid checks from the bank, and I am fearful that my assistant, who has forged my name to some of the checks, has absconded with about $3000.' I went immediately to Mr. Edison and told him of the forgery and the amount of money taken, and in what an embarrassing position we were for the next pay-roll. When I had finished he said: 'It is too bad the money is gone, but I will tell you what to do. Go and see the president of the bank which paid the forged checks. Get him to admit the bank's liability, and then say to him that Mr. Edison does not think the bank should suffer because he happened to have a dishonest clerk in his employ. Also say to him that I shall not ask them to make the amount good.' This was done; the bank admitting its liability and being much pleased with this action. When I reported to Mr. Edison he said: 'That's all right. We have made a

friend of the bank, and we may need friends later on.' And so it happened that some time afterward, when we greatly needed help in the way of loans, the bank willingly gave us the accommodations we required to tide us over a critical period."

This iron-ore concentrating project had lain close to Edison's heart and ambition—indeed, it had permeated his whole being to the exclusion of almost all other investigations or inventions for a while. For five years he had lived and worked steadily at Edison, leaving there only on Saturday night to spend Sunday at his home in Orange, and returning to the plant by an early train on Monday morning. Life at Edison was of the simple kind—work, meals, and a few hours' sleep—day by day. The little village, called into existence by the concentrating works, was of the most primitive nature and offered nothing in the way of frivolity or amusement. Even the scenery is austere. Hence Edison was enabled to follow his natural bent in being surrounded day and night by his responsible chosen associates, with whom he worked uninterrupted by outsiders from early morning away into the late hours of the evening. Those who were laboring with him, inspired by his unflagging enthusiasm, followed his example and devoted all their long waking hours to the furtherance of his plans with a zeal that ultimately bore fruit in the practical success here recorded.

In view of its present status, this colossal enterprise at Edison may well be likened to the prologue of a play that is to be subsequently enacted for the benefit of future generations, but before ringing

down the curtain it is desirable to preserve the unities by quoting the words of one of the principal actors, Mr. Mallory, who says: "The Concentrating Works had been in operation, and we had produced a considerable quantity of the briquettes, and had been able to sell only a portion of them, the iron market being in such condition that blast-furnaces were not making any new purchases of iron ore, and were having difficulty to receive and consume the ores which had been previously contracted for, so what sales we were able to make were at extremely low prices, my recollection being that they were between $3.50 and $3.80 per ton, whereas when the works had started we had hoped to obtain $6.00 to $6.50 per ton for the briquettes. We had also thoroughly investigated the wonderful deposit at Mesaba, and it was with the greatest possible reluctance that Mr. Edison was able to come finally to the conclusion that, under existing conditions, the concentrating plant could not then be made a commercial success. This decision was reached only after the most careful investigations and calculations, as Mr. Edison was just as full of fight and ambition to make it a success as when he first started.

"When this decision was reached Mr. Edison and I took the Jersey Central train from Edison, bound for Orange, and I did not look forward to the immediate future with any degree of confidence, as the concentrating plant was heavily in debt, without any early prospect of being able to pay off its indebtedness. On the train the matter of the future was discussed, and Mr. Edison said that, inasmuch as we had the

knowledge gained from our experience in the concentrating problem, we must, if possible, apply it to some practical use, and at the same time we must work out some other plans by which we could make enough money to pay off the Concentrating Company's indebtedness, Mr. Edison stating most positively that no company with which he had personally been actively connected had ever failed to pay its debts, and he did not propose to have the Concentrating Company any exception.

"In the discussion that followed he suggested several kinds of work which he had in his mind, and which might prove profitable. We figured carefully over the probabilities of financial returns from the Phonograph Works and other enterprises, and after discussing many plans, it was finally decided that we would apply the knowledge we had gained in the concentrating plant by building a plant for manufacturing Portland cement, and that Mr. Edison would devote his attention to the developing of a storage battery which did not use lead and sulphuric acid. So these two lines of work were taken up by Mr. Edison with just as much enthusiasm and energy as is usual with him, the commercial failure of the concentrating plant seeming not to affect his spirits in any way. In fact, I have often been impressed strongly with the fact that, during the dark days of the concentrating problem, Mr. Edison's desire was very strong that the creditors of the Concentrating Works should be paid in full; and only once did I hear him make any reference to the financial loss which he himself made, and he then said: 'As far as

I am concerned, I can any time get a job at $75 per month as a telegrapher, and that will amply take care of all my personal requirements.' As already stated, however, he started in with the maximum amount of enthusiasm and ambition, and in the course of about three years we succeeded in paying off all the indebtedness of the Concentrating Works, which amounted to several hundred thousand dollars.

"As to the state of Mr. Edison's mind when the final decision was reached to close down, if he was specially disappointed, there was nothing in his manner to indicate it, his every thought being for the future, and as to what could be done to pull us out of the financial situation in which we found ourselves, and to take advantage of the knowledge which we had acquired at so great a cost."

It will have been gathered that the funds for this great experiment were furnished largely by Edison. In fact, over two million dollars were spent in the attempt. Edison's philosophic view of affairs is given in the following anecdote from Mr. Mallory: "During the boom times of 1902, when the old General Electric stock sold at its high-water mark of about $330, Mr. Edison and I were on our way from the cement plant at New Village, New Jersey, to his home at Orange. When we arrived at Dover, New Jersey, we got a New York newspaper, and I called his attention to the quotation of that day on General Electric. Mr. Edison then asked: 'If I hadn't sold any of mine, what would it be worth to-day?' and after some figuring I replied: 'Over four million dollars.' When Mr. Edison is thinking seriously over a problem he is in

the habit of pulling his right eyebrow, which he did now for fifteen or twenty seconds. Then his face lighted up, and he said: 'Well, it's all gone, but we had a hell of a good time spending it.'" With which revelation of an attitude worthy of Mark Tapley himself, this chapter may well conclude.

CHAPTER XX

EDISON PORTLAND CEMENT

FEW developments in recent years have been more striking than the general adoption of cement for structural purposes of all kinds in the United States; or than the increase in its manufacture here. As a material for the construction of office buildings, factories, and dwellings, it has lately enjoyed an extraordinary vogue; yet every indication is confirmatory of the belief that such use has barely begun. Various reasons may be cited, such as the growing scarcity of wood, once the favorite building material in many parts of the country, and the increasing dearness of brick and stone. The fact remains, indisputable, and demonstrated flatly by the statistics of production. In 1902 the American output of cement was placed at about 21,000,000 barrels, valued at over $17,000,000. In 1907 the production is given as nearly 49,000,000 barrels. Here then is an industry that doubled in five years. The average rate of industrial growth in the United States is 10 per cent. a year, or doubling every ten years. It is a singular fact that electricity also so far exceeds the normal rate as to double in value and quantity of output and investment every five years. There is perhaps more than ordinary coincidence in the as-

sociation of Edison with two such active departments of progress.

As a purely manufacturing business the general cement industry is one of even remote antiquity, and if Edison had entered into it merely as a commercial enterprise by following paths already so well trodden, the fact would hardly have been worthy of even passing notice. It is not in his nature, however, to follow a beaten track except in regard to the recognition of basic principles; so that while the manufacture of Edison Portland cement embraces the main essentials and familiar processes of cement-making, such as crushing, drying, mixing, roasting, and grinding, his versatility and originality, as exemplified in the conception and introduction of some bold and revolutionary methods and devices, have resulted in raising his plant from the position of an outsider to the rank of the fifth largest producer in the United States, in the short space of five years after starting to manufacture.

Long before his advent in cement production, Edison had held very pronounced views on the value of that material as the one which would obtain largely for future building purposes on account of its stability. More than twenty-five years ago one of the writers of this narrative heard him remark during a discussion on ancient buildings: "Wood will rot, stone will chip and crumble, bricks disintegrate, but a cement and iron structure is apparently indestructible. Look at some of the old Roman baths. They are as solid as when they were built." With such convictions, and the vast fund of practical knowledge and experience

he had gained at Edison in the crushing and manipulation of large masses of magnetic iron ore during the preceding nine years, it is not surprising that on that homeward railway journey, mentioned at the close of the preceding chapter, he should have decided to go into the manufacture of cement, especially in view of the enormous growth of its use for structural purposes during recent times.

The field being a new one to him, Edison followed his usual course of reading up every page of authoritative literature on the subject, and seeking information from all quarters. In the mean time, while he was busy also with his new storage battery, Mr. Mallory, who had been hard at work on the cement plan, announced that he had completed arrangements for organizing a company with sufficient financial backing to carry on the business; concluding with the remark that it was now time to engage engineers to lay out the plant. Edison replied that he intended to do that himself, and invited Mr. Mallory to go with him to one of the draughting-rooms on an upper floor of the laboratory.

Here he placed a large sheet of paper on a draughting-table, and immediately began to draw out a plan of the proposed works, continuing all day and away into the evening, when he finished; thus completing within the twenty-four hours the full lay-out of the entire plant as it was subsequently installed, and as it has substantially remained in practical use to this time. It will be granted that this was a remarkable engineering feat, especially in view of the fact that Edison was then a new-comer in the cement busi-

ness, and also that if the plant were to be rebuilt to-day, no vital change would be desirable or necessary. In that one day's planning every part was considered and provided for, from the crusher to the packing-house. From one end to the other, the distance over which the plant stretches in length is about half a mile, and through the various buildings spread over this space there passes, automatically, in course of treatment, a vast quantity of material resulting in the production of upward of two and a quarter million pounds of finished cement every twenty-four hours, seven days in the week.

In that one day's designing provision was made not only for all important parts, but minor details, such, for instance, as the carrying of all steam, water, and air pipes, and electrical conductors in a large subway running from one end of the plant to the other; and an oiling system for the entire works. This latter deserves special mention, not only because of its arrangement for thorough lubrication, but also on account of the resultant economy affecting the cost of manufacture.

Edison has strong convictions on the liberal use of lubricants, but argued that in the ordinary oiling of machinery there is great waste, while much dirt is conveyed into the bearings. He therefore planned a system by which the ten thousand bearings in the plant are oiled automatically; requiring the services of only two men for the entire work. This is accomplished by a central pumping and filtering plant and the return of the oil from all parts of the works by gravity. Every bearing is made dust-

proof, and is provided with two interior pipes. One is above and the other below the bearing. The oil flows in through the upper pipe, and, after lubricating the shaft, flows out through the lower pipe back to the pumping station, where any dirt is filtered out and the oil returned to circulation. While this system of oiling is not unique, it was the first instance of its adaptation on so large and complete a scale, and illustrates the far-sightedness of his plans.

In connection with the adoption of this lubricating system there occurred another instance of his knowledge of materials and intuitive insight into the nature of things. He thought that too frequent circulation of a comparatively small quantity of oil would, to some extent, impair its lubricating qualities, and requested his assistants to verify this opinion by consultation with competent authorities. On making inquiry of the engineers of the Standard Oil Company, his theory was fully sustained. Hence, provision was made for carrying a large stock of oil, and for giving a certain period of rest to that already used.

A keen appreciation of ultimate success in the production of a fine quality of cement led Edison to provide very carefully in his original scheme for those details that he foresaw would become requisite—such, for instance, as ample stock capacity for raw materials and their automatic delivery in the various stages of manufacture, as well as mixing, weighing, and frequent sampling and analyzing during the progress through the mills. This provision even included the details of the packing-house, and his perspicacity in this case is well sustained from the fact that nine

years afterward, in anticipation of building an additional packing-house, the company sent a representative to different parts of the country to examine the systems used by manufacturers in the packing of large quantities of various staple commodities involving somewhat similar problems, and found that there was none better than that devised before the cement plant was started. Hence, the order was given to build the new packing-house on lines similar to those of the old one.

Among the many innovations appearing in this plant are two that stand out in bold relief as indicating the large scale by which Edison measures his ideas. One of these consists of the crushing and grinding machinery, and the other of the long kilns. In the preceding chapter there has been given a description of the giant rolls, by means of which great masses of rock, of which individual pieces may weigh eight or more tons, are broken and reduced to about a fourteen-inch size. The economy of this is apparent when it is considered that in other cement plants the limit of crushing ability is "one-man size"—that is, pieces not too large for one man to lift.

The story of the kiln, as told by Mr. Mallory, is illustrative of Edison's tendency to upset tradition and make a radical departure from generally accepted ideas. "When Mr. Edison first decided to go into the cement business, it was on the basis of his crushing-rolls and air separation, and he had every expectation of installing duplicates of the kilns which were then in common use for burning cement. These kilns were usually made of boiler iron, riveted, and

were about sixty feet long and six feet in diameter, and had a capacity of about two hundred barrels of cement clinker in twenty-four hours.

"When the detail plans for our plant were being drawn, Mr. Edison and I figured over the coal capacity and coal economy of the sixty-foot kiln, and each time thought that both could be materially bettered. After having gone over this matter several times, he said: 'I believe I can make a kiln which will give an output of one thousand barrels in twenty-four hours.' Although I had then been closely associated with him for ten years and was accustomed to see him accomplish great things, I could not help feeling the improbability of his being able to jump into an old-established industry—as a novice—and start by improving the 'heart' of the production so as to increase its capacity 400 per cent. When I pressed him for an explanation, he was unable to give any definite reasons, except that he felt positive it could be done. In this connection let me say that very many times I have heard Mr. Edison make predictions as to what a certain mechanical device ought to do in the way of output and costs, when his statements did not seem to be even among the possibilities. Subsequently, after more or less experience, these predictions have been verified, and I cannot help coming to the conclusion that he has a faculty, not possessed by the average mortal, of intuitively and correctly sizing up mechanical and commercial possibilities.

"But, returning to the kiln, Mr. Edison went to work immediately and very soon completed the design of a new type which was to be one hundred and

fifty feet long and nine feet in diameter, made up in ten-foot sections of cast iron bolted together and arranged to be revolved on fifteen bearings. He had a wooden model made and studied it very carefully, through a series of experiments. These resulted so satisfactorily that this form was finally decided upon, and ultimately installed as part of the plant.

"Well, for a year or so the kiln problem was a nightmare to me. When we started up the plant experimentally, and the long kiln was first put in operation, an output of about four hundred barrels in twenty-four hours was obtained. Mr. Edison was more than disappointed at this result. His terse comment on my report was: 'Rotten. Try it again.' When we became a little more familiar with the operation of the kiln we were able to get the output up to about five hundred and fifty barrels, and a little later to six hundred and fifty barrels per day. I would go down to Orange and report with a great deal of satisfaction the increase in output, but Mr. Edison would apparently be very much disappointed, and often said to me that the trouble was not with the kiln, but with our method of operating it; and he would reiterate his first statement that it would make one thousand barrels in twenty-four hours.

"Each time I would return to the plant with the determination to increase the output if possible, and we did increase it to seven hundred and fifty, then to eight hundred and fifty barrels. Every time I reported these increases Mr. Edison would still be disappointed. I said to him several times that if he was so sure the kiln could turn out one thousand barrels

in twenty-four hours we would be very glad to have him tell us how to do it, and that we would run it in any way he directed. He replied that he did not know what it was that kept the output down, but he was just as confident as ever that the kiln would make one thousand barrels per day, and that if he had time to work with and watch the kiln it would not take him long to find out the reasons why. He had made a number of suggestions throughout these various trials, however, and, as we continued to operate, we learned additional points in handling, and were able to get the output up to nine hundred barrels, then one thousand, and finally to over eleven hundred barrels per day, thus more than realizing the prediction made by Mr. Edison before even the plans were drawn. It is only fair to say, however, that prolonged experience has led us to the conclusion that the maximum economy in continuous operation of these kilns is obtained by working them at a little less than their maximum capacity.

"It is interesting to note, in connection with the Edison type of kiln, that when the older cement manufacturers first learned of it, they ridiculed the idea universally, and were not slow to predict our early 'finish' as cement manufacturers. The ultimate success of the kiln, however, proved their criticisms to be unwarranted. Once aware of its possibility, some of the cement manufacturers proceeded to avail themselves of the innovation (at first without Mr. Edison's consent), and to-day more than one-half of the Portland cement produced in this country is made in kilns of the Edison type. Old plants are

lengthening their kilns wherever practicable, and no wide-awake manufacturer building a modern plant could afford to install other than these long kilns. This invention of Mr. Edison has been recognized by the larger cement manufacturers, and there is every prospect now that the entire trade will take licenses under his kiln patents."

When he decided to go into the cement business, Edison was thoroughly awake to the fact that he was proposing to "butt into" an old-established industry, in which the principal manufacturers were concerns of long standing. He appreciated fully its inherent difficulties, not only in manufacture, but also in the marketing of the product. These considerations, together with his long-settled principle of striving always to make the best, induced him at the outset to study methods of producing the highest quality of product. Thus he was led to originate innovations in processes, some of which have been preserved as trade secrets; but of the others there are two deserving special notice—namely, the accuracy of mixing and the fineness of grinding.

In cement-making, generally speaking, cement rock and limestone in the rough are mixed together in such relative quantities as may be determined upon in advance by chemical analysis. In many plants this mixture is made by barrow or load units, and may be more or less accurate. Rule-of-thumb methods are never acceptable to Edison, and he devised therefore a system of weighing each part of the mixture, so that it would be correct to a pound, and, even at that, made the device "fool-proof," for as he observed

to one of his associates: "The man at the scales might get to thinking of the other fellow's best girl, so fifty or a hundred pounds of rock, more or less, wouldn't make much difference to him." The Edison checking plan embraces two hoppers suspended above two platform scales whose beams are electrically connected with a hopper-closing device by means of needles dipping into mercury cups. The scales are set according to the chemist's weighing orders, and the material is fed into the scales from the hoppers. The instant the beam tips, the connection is broken and the feed stops instantly, thus rendering it impossible to introduce any more material until the charge has been unloaded.

The fine grinding of cement clinker is distinctively Edisonian in both origin and application. As has been already intimated, its author followed a thorough course of reading on the subject long before reaching the actual projection or installation of a plant, and he had found all authorities to agree on one important point—namely, that the value of cement depends upon the fineness to which it is ground.[1] He also

[1] For a proper understanding and full appreciation of the importance of fine grinding, it may be explained that Portland cement (as manufactured in the Lehigh Valley) is made from what is commonly spoken of as "cement rock," with the addition of sufficient limestone to give the necessary amount of lime. The rock is broken down and then ground to a fineness of 80 to 90 per cent. through a 200-mesh screen. This ground material passes through kilns and comes out in "clinker." This is ground, and that part of this finely ground clinker that will pass a 200-mesh screen is cement; the residue is still clinker. These coarse particles, or clinkers, absorb water very slowly, are practically inert, and have very feeble cementing properties. The residue on a 200-mesh screen is useless.

ascertained that in the trade the standard of fineness was that 75 per cent. of the whole mass would pass through a 200-mesh screen. Having made some improvements in his grinding and screening apparatus, and believing that in the future engineers, builders, and contractors would eventually require a higher degree of fineness, he determined, in advance of manufacturing, to raise the standard ten points, so that at least 85 per cent. of his product should pass through a 200-mesh screen. This was a bold step to be taken by a new-comer, but his judgment, backed by a full confidence in ability to live up to this standard, has been fully justified in its continued maintenance, despite the early incredulity of older manufacturers as to the possibility of attaining such a high degree of fineness.

If Edison measured his happiness, as men often do, by merely commercial or pecuniary rewards of success, it would seem almost redundant to state that he has continued to manifest an intense interest in the cement plant. Ordinarily, his interest as an inventor wanes in proportion to the approach to mere commercialism—in other words, the keenness of his pleasure is in overcoming difficulties rather than the mere piling up of a bank account. He is entirely sensible of the advantages arising from a good balance at the banker's, but that has not been the goal of his ambition. Hence, although his cement enterprise reached the commercial stage a long time ago, he has been firmly convinced of his own ability to devise still further improvements and economical processes of greater or less fundamental importance, and has,

therefore, made a constant study of the problem as a whole and in all its parts. By means of frequent reports, aided by his remarkable memory, he keeps in as close touch with the plant as if he were there in person every day, and is thus enabled to suggest improvement in any particular detail. The engineering force has a great respect for the accuracy of his knowledge of every part of the plant, for he remembers the dimensions and details of each item of machinery, sometimes to the discomfiture of those who are around it every day.

A noteworthy instance of Edison's memory occurred in connection with this cement plant. Some years ago, as its installation was nearing completion, he went up to look it over and satisfy himself as to what needed to be done. On the arrival of the train at 10.40 in the morning, he went to the mill, and, with Mr. Mason, the general superintendent, started at the crusher at one end, and examined every detail all the way through to the packing-house at the other end. He made neither notes nor memoranda, but the examination required all the day, which happened to be a Saturday. He took a train for home at 5.30 in the afternoon, and on arriving at his residence at Orange, got out some note-books and began to write entirely from memory each item consecutively. He continued at this task all through Saturday night, and worked steadily on until Sunday afternoon, when he completed a list of nearly six hundred items. The nature of this feat is more appreciable from the fact that a large number of changes included all the figures of new dimensions he had decided

upon for some of the machinery throughout the plant.

As the reader may have a natural curiosity to learn whether or not the list so made was practical, it may be stated that it was copied and sent up to the general superintendent with instructions to make the modifications suggested, and report by numbers as they were attended to. This was faithfully done, all the changes being made before the plant was put into operation. Subsequent experience has amply proven the value of Edison's prescience at this time.

Although Edison's achievements in the way of improved processes and machinery have already made a deep impression in the cement industry, it is probable that this impression will become still more profoundly stamped upon it in the near future with the exploitation of his "Poured Cement House." The broad problem which he set himself was to provide handsome and practically indestructible detached houses, which could be taken by wage-earners at very moderate monthly rentals. He turned this question over in his mind for several years, and arrived at the conclusion that a house cast in one piece would be the answer. To produce such a house involved the overcoming of many engineering and other technical difficulties. These he attacked vigorously and disposed of patiently one by one.

In this connection a short anecdote may be quoted from Edison as indicative of one of the influences turning his thoughts in this direction. In the story of the ore-milling work, it has been noted that the plant was shut down owing to the competition of

the cheap ore from the Mesaba Range. Edison says: "When I shut down, the insurance companies cancelled my insurance. I asked the reason why. 'Oh,' they said, 'this thing is a failure. The moral risk is too great.' 'All right; I am glad to hear it. I will now construct buildings that won't have any moral risk.' I determined to go into the Portland cement business. I organized a company and started cement-works which have now been running successfully for several years. I had so perfected the machinery in trying to get my ore costs down that the making of cheap cement was an easy matter to me. I built these works entirely of concrete and steel, so that there is not a wagon-load of lumber in them; and so that the insurance companies would not have any possibility of having any 'moral risk.' Since that time I have put up numerous factory buildings all of steel and concrete, without any combustible whatever about them—to avoid this 'moral risk.' I am carrying further the application of this idea in building private houses for poor people, in which there will be no 'moral risk' at all—nothing whatever to burn, not even by lightning."

As a casting necessitates a mold, together with a mixture sufficiently fluid in its nature to fill all the interstices completely, Edison devoted much attention to an extensive series of experiments for producing a free-flowing combination of necessary materials. His proposition was against all precedent. All expert testimony pointed to the fact that a mixture of concrete (cement, sand, crushed stone, and water) could not be made to flow freely to the small-

est parts of an intricate set of molds; that the heavy parts of the mixture could not be held in suspension, but would separate out by gravity and make an unevenly balanced structure; that the surface would be full of imperfections, etc.

Undeterred by the unanimity of adverse opinions, however, he pursued his investigations with the thorough minuteness that characterizes all his laboratory work, and in due time produced a mixture which on elaborate test overcame all objections and answered the complex requirements perfectly, including the making of a surface smooth, even, and entirely waterproof. All the other engineering problems have received study in like manner, and have been overcome, until at the present writing the whole question is practically solved and has been reduced to actual practice. The Edison poured or cast cement house may be reckoned as a reality.

The general scheme, briefly outlined, is to prepare a model and plans of the house to be cast, and then to design a set of molds in sections of convenient size. When all is ready, these molds, which are of cast iron with smooth interior surfaces, are taken to the place where the house is to be erected. Here there has been provided a solid concrete cellar floor, technically called "footing." The molds are then locked together so that they rest on this footing. Hundreds of pieces are necessary for the complete set. When they have been completely assembled, there will be a hollow space in the interior, representing the shape of the house. Reinforcing rods are also placed in the molds, to be left behind in the finished house.

Next comes the pouring of the concrete mixture into this form. Large mechanical mixers are used, and, as it is made, the mixture is dumped into tanks, from which it is conveyed to a distributing tank on the top, or roof, of the form. From this tank a large number of open troughs or pipes lead the mixture to various openings in the roof, whence it flows down and fills all parts of the mold from the footing in the basement until it overflows at the tip of the roof.

The pouring of the entire house is accomplished in about six hours, and then the molds are left undisturbed for six days, in order that the concrete may set and harden. After that time the work of taking away the molds is begun. This requires three or four days. When the molds are taken away an entire house is disclosed, cast in one piece, from cellar to tip of roof, complete with floors, interior walls, stairways, bath and laundry tubs, electric-wire conduits, gas, water, and heating pipes. No plaster is used anywhere; but the exterior and interior walls are smooth and may be painted or tinted, if desired. All that is now necessary is to put in the windows, doors, heater, and lighting fixtures, and to connect up the plumbing and heating arrangements, thus making the house ready for occupancy.

As these iron molds are not ephemeral like the wooden framing now used in cement construction, but of practically illimitable life, it is obvious that they can be used a great number of times. A complete set of molds will cost approximately $25,000, while the necessary plant will cost about $15,000 more.

It is proposed to work as a unit plant for successful operation at least six sets of molds, to keep the men busy and the machinery going. Any one, with a sheet of paper, can ascertain the yearly interest on the investment as a fixed charge to be assessed against each house, on the basis that one hundred and forty-four houses can be built in a year with the battery of six sets of molds. Putting the sum at $175,000, and the interest at 6 per cent. on the cost of the molds and 4 per cent. for breakage, together with 6 per cent. interest and 15 per cent. depreciation on machinery, the plant charge is approximately $140 per house. It does not require a particularly acute prophetic vision to see "Flower Towns" of "Poured Houses" going up in whole suburbs outside all our chief centres of population.

Edison's conception of the workingman's ideal house has been a broad one from the very start. He was not content merely to provide a roomy, moderately priced house that should be fireproof, waterproof, and vermin-proof, and practically indestructible, but has been solicitous to get away from the idea of a plain "packing-box" type. He has also provided for ornamentation of a high class in designing the details of the structure. As he expressed it: "We will give the workingman and his family ornamentation in their house. They deserve it, and besides, it costs no more after the pattern is made to give decorative effects than it would to make everything plain." The plans have provided for a type of house that would cost not far from $30,000 if built of cut stone. He gave to Messrs. Mann & McNaillie, architects,

New York, his idea of the type of house he wanted. On receiving these plans he changed them considerably, and built a model. After making many more changes in this while in the pattern shop, he produced a house satisfactory to himself.

This one-family house has a floor plan twenty-five by thirty feet, and is three stories high. The first floor is divided off into two large rooms—parlor and living-room—and the upper floors contain four large bedrooms, a roomy bath-room, and wide halls. The front porch extends eight feet, and the back porch three feet. A cellar seven and a half feet high extends under the whole house, and will contain the boiler, wash-tubs, and coal-bunker. It is intended that the house shall be built on lots forty by sixty feet, giving a lawn and a small garden.

It is contemplated that these houses shall be built in industrial communities, where they can be put up in groups of several hundred. If erected in this manner, and by an operator buying his materials in large quantities, Edison believes that these houses can be erected complete, including heating apparatus and plumbing, for $1200 each. This figure would also rest on the basis of using in the mixture the gravel excavated on the site. Comment has been made by persons of artistic taste on the monotony of a cluster of houses exactly alike in appearance, but this criticism has been anticipated, and the molds are so made as to be capable of permutations of arrangement. Thus it will be possible to introduce almost endless changes in the style of house by variation of the same set of molds.

EDISON PORTLAND CEMENT

For more than forty years Edison was avowedly an inventor for purely commercial purposes; but within the last two years he decided to retire from that field so far as new inventions were concerned, and to devote himself to scientific research and experiment in the leisure hours that might remain after continuing to improve his existing devices. But although the poured cement house was planned during the commercial period, the spirit in which it was conceived arose out of an earnest desire to place within the reach of the wage-earner an opportunity to better his physical, pecuniary, and mental conditions in so far as that could be done through the medium of hygienic and beautiful homes at moderate rentals. From the first Edison has declared that it was not his intention to benefit pecuniarily through the exploitation of this project. Having actually demonstrated the practicability and feasibility of his plans, he will allow responsible concerns to carry them into practice under such limitations as may be necessary to sustain the basic object, but without any payment to him except for the actual expense incurred. The hypercritical may cavil and say that, as a manufacturer of cement, Edison will be benefited. True, but as *any* good Portland cement can be used, and no restrictions as to source of supply are enforced, he, or rather his company, will be merely one of many possible purveyors.

This invention is practically a gift to the workingmen of the world and their families. The net result will be that those who care to avail themselves of the privilege may, sooner or later, forsake the crowded

apartment or tenement and be comfortably housed in sanitary, substantial, and roomy homes fitted with modern conveniences, and beautified by artistic decorations, with no outlay for insurance or repairs; no dread of fire, and all at a rental which Edison believes will be not more, but probably less than, $10 per month in any city of the United States. While his achievement in its present status will bring about substantial and immediate benefits to wage-earners, his thoughts have already travelled some years ahead in the formulation of a still further beneficial project looking toward the individual ownership of these houses on a basis startling in its practical possibilities.

CHAPTER XXI

MOTION PICTURES

THE preceding chapters have treated of Edison in various aspects as an inventor, some of which are familiar to the public, others of which are believed to be in the nature of a novel revelation, simply because no one had taken the trouble before to put the facts together. To those who have perhaps grown weary of seeing Edison's name in articles of a sensational character, it may sound strange to say that, after all, justice has not been done to his versatile and many-sided nature; and that the mere prosaic facts of his actual achievement outrun the wildest flights of irrelevant journalistic imagination. Edison hates nothing more than to be dubbed a genius or played up as a "wizard"; but this fate has dogged him until he has come at last to resign himself to it with a resentful indignation only to be appreciated when watching him read the latest full-page Sunday "spread" that develops a casual conversation into oracular verbosity, and gives to his shrewd surmise the cast of inspired prophecy.

In other words, Edison's real work has seldom been seriously discussed. Rather has it been taken as a point of departure into a realm of fancy and romance, where as a relief from drudgery he is sometimes quite

willing to play the pipe if some one will dance to it. Indeed, the stories woven around his casual suggestions are tame and vapid alongside his own essays in fiction, probably never to be published, but which show what a real inventor can do when he cuts loose to create a new heaven and a new earth, unrestrained by any formal respect for existing conditions of servitude to three dimensions and the standard elements.

The present chapter, essentially technical in its subject-matter, is perhaps as significant as any in this biography, because it presents Edison as the Master Impresario of his age, and maybe of many following ages also. His phonographs and his motion pictures have more audiences in a week than all the theatres in America in a year. The "Nickelodeon" is the central fact in modern amusement, and Edison founded it. All that millions know of music and drama he furnishes; and the whole study of the theatrical managers thus reaching the masses is not to ascertain the limitations of the new art, but to discover its boundless possibilities. None of the exuberant versions of things Edison has not done could endure for a moment with the simple narrative of what he has really done as the world's new Purveyor of Pleasure. And yet it all depends on the toilful conquest of a subtle and intricate art. The story of the invention of the phonograph has been told. That of the evolution of motion pictures follows. It is all one piece of sober, careful analysis, and stubborn, successful attack on the problem.

The possibility of making a record of animate movement, and subsequently reproducing it, was predicted

long before the actual accomplishment. This, as we have seen, was also the case with the phonograph, the telephone, and the electric light. As to the phonograph, the prediction went only so far as the *result;* the apparent intricacy of the problem being so great that the *means* for accomplishing the desired end were seemingly beyond the grasp of the imagination or the mastery of invention.

With the electric light and the telephone the prediction included not only the result to be accomplished, but, in a rough and general way, the mechanism itself; that is to say, long before a single sound was intelligibly transmitted it was recognized that such a thing might be done by causing a diaphragm, vibrated by original sounds, to communicate its movements to a distant diaphragm by a suitably controlled electric current. In the case of the electric light, the heating of a conductor to incandescence in a highly rarefied atmosphere was suggested as a scheme of illumination long before its actual accomplishment, and in fact before the production of a suitable generator for delivering electric current in a satisfactory and economical manner.

It is a curious fact that while the modern art of motion pictures depends essentially on the development of instantaneous photography, the suggestion of the possibility of securing a reproduction of animate motion, as well as, in a general way, of the mechanism for accomplishing the result, was made many years before the instantaneous photograph became possible. While the first motion picture was not actually produced until the summer of 1889, its

real birth was almost a century earlier, when Plateau, in France, constructed an optical toy, to which the impressive name of "Phenakistoscope" was applied, for producing an illusion of motion. This toy in turn was the forerunner of the Zoetrope, or so-called "Wheel of Life," which was introduced into this country about the year 1845. These devices were essentially toys, depending for their successful operation (as is the case with motion pictures) upon a physiological phenomenon known as persistence of vision. If, for instance, a bright light is moved rapidly in front of the eye in a dark room, it appears not as an illuminated spark, but as a line of fire; a so-called shooting star, or a flash of lightning produces the same effect. This result is purely physiological, and is due to the fact that the retina of the eye may be considered as practically a sensitized plate of relatively slow speed, and an image impressed upon it remains, before being effaced, for a period of from one-tenth to one-seventh of a second, varying according to the idiosyncrasies of the individual and the intensity of the light. When, therefore, it is said that we should only believe things we actually see, we ought to remember that in almost every instance we never see things as they are.

Bearing in mind the fact that when an image is impressed on the human retina it persists for an appreciable period, varying as stated, with the individual, and depending also upon the intensity of the illumination, it will be seen that, if a number of pictures or photographs are successively presented to the eye, they will appear as a single, continuous photo-

graph, provided the periods between them are short enough to prevent one of the photographs from being effaced before its successor is presented. If, for instance, a series of identical portraits were rapidly presented to the eye, a single picture would apparently be viewed, or if we presented to the eye the series of photographs of a moving object, each one representing a minute successive phase of the movement, the movements themselves would apparently again take place.

With the Zoetrope and similar toys rough drawings were used for depicting a few broadly outlined successive phases of movement, because in their day instantaneous photography was unknown, and in addition there were certain crudities of construction that seriously interfered with the illumination of the pictures, rendering it necessary to make them practically as silhouettes on a very conspicuous background. Hence it will be obvious that these toys produced merely an *illusion* of *theoretical* motion.

But with the knowledge of even an illusion of motion, and with the philosophy of persistence of vision fully understood, it would seem that, upon the development of instantaneous photography, the reproduction of *actual* motion by means of pictures would have followed, almost as a necessary consequence. Yet such was not the case, and success was ultimately accomplished by Edison only after persistent experimenting along lines that could not have been predicted, including the construction of apparatus for the purpose, which, if it had not been made, would undoubtedly be considered impossible.

In fact, if it were not for Edison's peculiar mentality, that refuses to recognize anything as impossible until indubitably demonstrated to be so, the production of motion pictures would certainly have been delayed for years, if not for all time.

One of the earliest suggestions of the possibility of utilizing photography for exhibiting the illusion of actual movement was made by Ducos, who, as early as 1864, obtained a patent in France, in which he said: "My invention consists in substituting rapidly and without confusion to the eye not only of an individual, but when so desired of a whole assemblage, the enlarged images of a great number of pictures when taken instantaneously and successively at very short intervals. . . . The observer will believe that he sees only one image, which changes gradually by reason of the successive changes of form and position of the objects which occur from one picture to the other. Even supposing that there be a slight interval of time during which the same object was not shown, the persistence of the luminous impression upon the eye will fill this gap. There will be as it were a living representation of nature and . . . the same scene will be reproduced upon the screen with the same degree of animation. . . . By means of my apparatus I am enabled especially to reproduce the passing of a procession, a review of military manœuvres, the movements of a battle, a public fête, a theatrical scene, the evolution or the dances of one or of several persons, the changing expression of countenance, or, if one desires, the grimaces of a human face; a marine view, the motion of waves, the passage of clouds in

a stormy sky, particularly in a mountainous country, the eruption of a volcano," etc.

Other dreamers, contemporaries of Ducos, made similar suggestions; they recognized the scientific possibility of the problem, but they were irretrievably handicapped by the shortcomings of photography. Even when substantially instantaneous photographs were evolved at a somewhat later date they were limited to the use of wet plates, which have to be prepared by the photographer and used immediately, and were therefore quite out of the question for any practical commercial scheme. Besides this, the use of plates would have been impracticable, because the limitations of their weight and size would have prevented the taking of a large number of pictures at a high rate of speed, even if the sensitized surface had been sufficiently rapid.

Nothing ever came of Ducos' suggestions and those of the early dreamers in this essentially practical and commercial art, and their ideas have made no greater impress upon the final result than Jules Verne's *Nautilus* of our boyhood days has developed the modern submarine. From time to time further suggestions were made, some in patents, and others in photographic and scientific publications, all dealing with the fascinating thought of preserving and representing actual scenes and events. The first serious attempt to secure an illusion of motion by photography was made in 1878 by Eadward Muybridge as a result of a wager with the late Senator Leland Stanford, the California pioneer and horse-lover, who had asserted, contrary to the usual belief, that a trotting-

horse at one point in its gait left the ground entirely. At this time wet plates of very great rapidity were known, and by arranging a series of cameras along the line of a track and causing the horse in trotting past them, by striking wires or strings attached to the shutters, to actuate the cameras at the right instant, a series of very clear instantaneous photographs was obtained. From these negatives, when developed, positive prints were made, which were later mounted on a modified form of Zoetrope and projected upon a screen.

One of these early exhibitions is described in the *Scientific American* of June 5, 1880: "While the separate photographs had shown the successive positions of a trotting or running horse in making a single stride, the Zoögyroscope threw upon the screen apparently the living animal. Nothing was wanting but the clatter of hoofs upon the turf, and an occasional breath of steam from the nostrils, to make the spectator believe that he had before him genuine flesh-and-blood steeds. In the views of hurdle-leaping, the simulation was still more admirable, even to the motion of the tail as the animal gathered for the jump, the raising of his head, all were there. Views of an ox trotting, a wild bull on the charge, greyhounds and deer running and birds flying in mid-air were shown, also athletes in various positions." It must not be assumed from this statement that even as late as the work of Muybridge anything like a true illusion of movement had been obtained, because such was not the case. Muybridge secured only one cycle of movement, because a separate

camera had to be used for each photograph and consequently each cycle was reproduced over and over again. To have made photographs of a trotting-horse for one minute at the moderate rate of twelve per second would have required, under the Muybridge scheme, seven hundred and twenty separate cameras, whereas with the modern art only a single camera is used. A further defect with the Muybridge pictures was that since each photograph was secured when the moving object was in the centre of the plate, the reproduction showed the object always centrally on the screen with its arms or legs in violent movement, but not making any progress, and with the scenery rushing wildly across the field of view!

In the early 80's the dry plate was first introduced into general use, and from that time onward its rapidity and quality were gradually improved; so much so that after 1882 Prof. E. J. Marey, of the French Academy, who in 1874 had published a well-known treatise on "Animal Movement," was able by the use of dry plates to carry forward the experiments of Muybridge on a greatly refined scale. Marey was, however, handicapped by reason of the fact that glass plates were still used, although he was able with a single camera to obtain twelve photographs on successive plates in the space of one second. Marey, like Muybridge, photographed only one cycle of the movements of a single object, which was subsequently reproduced over and over again, and the camera was in the form of a gun, which could follow the object so that the successive pictures would be always located in the centre of the plates.

The review above given, as briefly as possible, comprises substantially the sum of the world's knowledge at the time the problem of recording and reproducing animate movement was first undertaken by Edison. The most that could be said of the condition of the art when Edison entered the field was that it had been recognized that if a series of instantaneous photographs of a moving object could be secured at an enormously high rate—many times per second—they might be passed before the eye either directly or by projection upon a screen, and thereby result in a reproduction of the movements. Two very serious difficulties lay in the way of actual accomplishment, however—first, the production of a sensitive surface in such form and weight as to be capable of being successively brought into position and exposed, at the necessarily high rate; and, second, the production of a camera capable of so taking the pictures. There were numerous other workers in the field, but they added nothing to what had already been proposed. Edison himself knew nothing of Ducos, or that the suggestions had advanced beyond the single centrally located photographs of Muybridge and Marey. As a matter of public policy, the law presumes that an inventor must be familiar with all that has gone before in the field within which he is working, and if a suggestion is limited to a patent granted in New South Wales, or is described in a single publication in Brazil, an inventor in America, engaged in the same field of thought, is by legal fiction presumed to have knowledge not only of the existence of that patent or publication, but of its contents.

We say this not in the way of an apology for the extent of Edison's contribution to the motion-picture art, because there can be no question that he was as much the creator of that art as he was of the phonographic art; but to show that in a practical sense the suggestion of the art itself was original with him. He himself says: "In the year 1887 the idea occurred to me that it was possible to devise an instrument which should do for the eye what the phonograph does for the ear, and that by a combination of the two, all motion and sound could be recorded and reproduced simultaneously. This idea, the germ of which came from the little toy called the Zoetrope and the work of Muybridge, Marey, and others, has now been accomplished, so that every change of facial expression can be recorded and reproduced life-size. The kinetoscope is only a small model illustrating the present stage of the progress, but with each succeeding month new possibilities are brought into view. I believe that in coming years, by my own work and that of Dickson, Muybridge, Marey, and others who will doubtless enter the field, grand opera can be given at the Metropolitan Opera House at New York without any material change from the original, and with artists and musicians long since dead."

In the earliest experiments attempts were made to secure the photographs, reduced microscopically, arranged spirally on a cylinder about the size of a phonograph record, and coated with a highly sensitized surface, the cylinder being given an intermittent movement, so as to be at rest during each

exposure. Reproductions were obtained in the same way, positive prints being observed through a magnifying glass. Various forms of apparatus following this general type were made, but they were all open to the serious objection that the very rapid emulsions employed were relatively coarse-grained and prevented the securing of sharp pictures of microscopic size. On the other hand, the enlarging of the apparatus to permit larger pictures to be obtained would present too much weight to be stopped and started with the requisite rapidity. In these early experiments, however, it was recognized that, to secure proper results, a single camera should be used, so that the objects might move across its field just as they move across the field of the human eye; and the important fact was also observed that the rate at which persistence of vision took place represented the minimum speed at which the pictures should be obtained. If, for instance, five pictures per second were taken (half of the time being occupied in exposure and the other half in moving the exposed portion of the film out of the field of the lens and bringing a new portion into its place), and the same ratio is observed in exhibiting the pictures, the interval of time between successive pictures would be one-tenth of a second; and for a normal eye such an exhibition would present a substantially continuous photograph. If the angular movement of the object across the field is very slow, as, for instance, a distant vessel, the successive positions of the object are so nearly coincident that when reproduced before the eye an impression of smooth, continuous movement is secured. If, how-

ever, the object is moving rapidly across the field of view, one picture will be separated from its successor to a marked extent, and the resulting impression will be jerky and unnatural. Recognizing this fact, Edison always sought for a very high speed, so as to give smooth and natural reproductions, and even with his experimental apparatus obtained upward of forty-eight pictures per second, whereas, in practice, at the present time, the accepted rate varies between twenty and thirty per second. In the efforts of the present day to economize space by using a minimum length of film, pictures are frequently taken at too slow a rate, and the reproductions are therefore often objectionable, by reason of more or less jerkiness.

During the experimental period and up to the early part of 1889, the kodak film was being slowly developed by the Eastman Kodak Company. Edison perceived in this product the solution of the problem on which he had been working, because the film presented a very light body of tough material on which relatively large photographs could be taken at rapid intervals. The surface, however, was not at first sufficiently sensitive to admit of sharply defined pictures being secured at the necessarily high rates, It seemed apparent, therefore, that in order to obtain the desired speed there would have to be sacrificed that fineness of emulsion necessary for the securing of sharp pictures. But as was subsequently seen, this sacrifice was in time rendered unnecessary. Much credit is due the Eastman experts—stimulated and encouraged by Edison, but independently of him—for the production at last of a highly sensitized,

fine-grained emulsion presenting the highly sensitized surface that Edison sought.

Having at last obtained apparently the proper material upon which to secure the photographs, the problem then remained to devise an apparatus by means of which from twenty to forty pictures per second could be taken; the film being stationary during the exposure and, upon the closing of the shutter, being moved to present a fresh surface. In connection with this problem it is interesting to note that this question of high speed was apparently regarded by all Edison's predecessors as the crucial point. Ducos, for example, expended a great deal of useless ingenuity in devising a camera by means of which a tape-line film could receive the photographs while being in continuous movement, necessitating the use of a series of moving lenses. Another experimenter, Dumont, made use of a single large plate and a great number of lenses which were successively exposed. Muybridge, as we have seen, used a series of cameras, one for each plate. Marey was limited to a very few photographs, because the entire surface had to be stopped and started in connection with each exposure.

After the accomplishment of the fact, it would seem to be the obvious thing to use a single lens and move the sensitized film with respect to it, intermittently bringing the surface to rest, then exposing it, then cutting off the light and moving the surface to a fresh position; but who, other than Edison, would assume that such a device could be made to repeat these movements over and over again at the rate of

twenty to forty per second? Users of kodaks and other forms of film cameras will appreciate perhaps better than others the difficulties of the problem, because in their work, after an exposure, they have to advance the film forward painfully to the extent of the next picture before another exposure can take place, these operations permitting of speeds of but a few pictures per minute at best. Edison's solution of the problem involved the production of a kodak in which from twenty to forty pictures should be taken *in each second*, and with such fineness of adjustment that each should exactly coincide with its predecessors even when subjected to the test of enlargement by projection. This, however, was finally accomplished, and in the summer of 1889 the first modern motion-picture camera was made. More than this, the mechanism for operating the film was so constructed that the movement of the film took place in one-tenth of the time required for the exposure, giving the film an opportunity to come to rest prior to the opening of the shutter. From that day to this the Edison camera has been the accepted standard for securing pictures of objects in motion, and such changes as have been made in it have been purely in the nature of detail mechanical refinements.

The earliest form of exhibiting apparatus, known as the Kinetoscope, was a machine in which a positive print from the negative obtained in the camera was exhibited directly to the eye through a peep-hole; but in 1895 the films were applied to modified forms of magic lanterns, by which the images are projected upon a screen. Since that date the industry

has developed very rapidly, and at the present time (1910) all of the principal American manufacturers of motion pictures are paying a royalty to Edison under his basic patents.

From the early days of pictures representing simple movements, such as a man sneezing, or a skirt-dance, there has been a gradual evolution, until now the pictures represent not only actual events in all their palpitating instantaneity, but highly developed dramas and scenarios enacted in large, well-equipped glass studios, and the result of infinite pains and expense of production. These pictures are exhibited in upward of eight thousand places of amusement in the United States, and are witnessed by millions of people each year. They constitute a cheap, clean form of amusement for many persons who cannot spare the money to go to the ordinary theatres, or they may be exhibited in towns that are too small to support a theatre. More than this, they offer to the poor man an effective substitute for the saloon. Probably no invention ever made has afforded more pleasure and entertainment than the motion picture.

Aside from the development of the motion picture as a spectacle, there has gone on an evolution in its use for educational purposes of wide range, which must not be overlooked. In fact, this form of utilization has been carried further in Europe than in this country as a means of demonstration in the arts and sciences. One may study animal life, watch a surgical operation, follow the movement of machinery, take lessons in facial expression or in calisthenics. It seems a pity that in motion pictures should at last

have been found the only competition that the ancient marionettes cannot withstand. But aside from the disappearance of those entertaining puppets, all else is gain in the creation of this new art.

The work at the Edison laboratory in the development of the motion picture was as usual intense and concentrated, and, as might be expected, many of the early experiments were quite primitive in their character until command had been secured of relatively perfect apparatus. The subjects registered jerkily by the films were crude and amusing, such as of Fred Ott's sneeze, Carmencita dancing, Italians and their performing bears, fencing, trapeze stunts, horsemanship, blacksmithing—just simple movements without any attempt to portray the silent drama. One curious incident of this early study occurred when "Jim" Corbett was asked to box a few rounds in front of the camera, with a "dark un" to be selected locally. This was agreed to, and a celebrated bruiser was brought over from Newark. When this "sparring partner" came to face Corbett in the imitation ring he was so paralyzed with terror he could hardly move. It was just after Corbett had won one of his big battles as a prize-fighter, and the dismay of his opponent was excusable. The "boys" at the laboratory still laugh consumedly when they tell about it.

The first motion-picture studio was dubbed by the staff the "Black Maria." It was an unpretentious oblong wooden structure erected in the laboratory yard, and had a movable roof in the central part. This roof could be raised or lowered at will. The

building was covered with black roofing paper, and was also painted black inside. There was no scenery to render gay this lugubrious environment, but the black interior served as the common background for the performers, throwing all their actions into high relief. The whole structure was set on a pivot so that it could be swung around with the sun; and the movable roof was opened so that the accentuating sunlight could stream in upon the actor whose gesticulations were being caught by the camera. These beginnings and crudities are very remote from the elaborate and expensive paraphernalia and machinery with which the art is furnished to-day.

At the present time the studios in which motion pictures are taken are expensive and pretentious affairs. An immense building of glass, with all the properties and stage-settings of a regular theatre, is required. The Bronx Park studio of the Edison company cost at least one hundred thousand dollars, while the well-known house of Pathe Fréres in France—one of Edison's licensees—makes use of no fewer than seven of these glass theatres. All of the larger producers of pictures in this country and abroad employ regular stock companies of actors, men and women selected especially for their skill in pantomime, although, as most observers have perhaps suspected, in the actual taking of the pictures the performers are required to carry on an animated and prepared dialogue with the same spirit and animation as on the regular stage. Before setting out on the preparation of a picture, the book is first written —known in the business as a scenario—giving a

MR. EDISON AND A GROUP OF MOTION-PICTURE MEN CAUGHT BY THE MOTION-PICTURE CAMERA IN THE ENJOYMENT OF A JOKE—DECEMBER 18, 1909

complete statement as to the scenery, drops and background, and the sequence of events, divided into scenes as in an ordinary play. These are placed in the hands of a "producer," corresponding to a stage-director, generally an actor or theatrical man of experience, with a highly developed dramatic instinct. The various actors are selected, parts are assigned, and the scene-painters are set to work on the production of the desired scenery. Before the photographing of a scene, a long series of rehearsals takes place, the incidents being gone over and over again until the actors are "letter perfect." So persistent are the producers in the matter of rehearsals and the refining and elaboration of details, that frequently a picture that may be actually photographed and reproduced in fifteen minutes, may require two or three weeks for its production. After the rehearsal of a scene has advanced sufficiently to suit the critical requirements of the producer, the camera man is in requisition, and he is consulted as to lighting so as to produce the required photographic effect. Preferably, of course, sunlight is used whenever possible, hence the glass studios; but on dark days, and when night-work is necessary, artificial light of enormous candle-power is used, either mercury arcs or ordinary arc lights of great size and number.

Under all conditions the light is properly screened and diffused to suit the critical eye of the camera man. All being in readiness, the actual picture is taken, the actors going through their rehearsed parts, the producer standing out of the range of the camera, and with a megaphone to his lips yelling out his

instructions, imprecations, and approval, and the camera man grinding at the crank of the camera and securing the pictures at the rate of twenty or more per second, making a faithful and permanent record of every movement and every change of facial expression. At the end of the scene the negative is developed in the ordinary way, and is then ready for use in the printing of the positives for sale. When a further scene in the play takes place in the same setting, and without regard to its position in the plot, it is taken up, rehearsed, and photographed in the same way, and afterward all the scenes are cemented together in the proper sequence, and form the complete negative. Frequently, therefore, in the production of a motion-picture play, the first and the last scene may be taken successively, the only thing necessary being, of course, that after all is done the various scenes should be arranged in their proper order. The frames, having served their purpose, now go back to the scene-painter for further use. All pictures are not taken in studios, because when light and weather permit and proper surroundings can be secured outside, scenes can best be obtained with natural scenery—city streets, woods, and fields. The great drawback to the taking of pictures out-of-doors, however, is the inevitable crowd, attracted by the novelty of the proceedings, which makes the camera man's life a torment by getting into the field of his instrument. The crowds are patient, however, and in one Edison picture involving the blowing up of a bridge by the villain of the piece and the substitution of a pontoon bridge by a company of engineers just

in time to allow the heroine to pass over in her automobile, more than a thousand people stood around for almost an entire day waiting for the tedious rehearsals to end and the actual performance to begin. Frequently large bodies of men are used in pictures, such as troops of soldiers, and it is an open secret that for weeks during the Boer War regularly equipped British and Boer armies confronted each other on the peaceful hills of Orange, New Jersey, ready to enact before the camera the stirring events told by the cable from the seat of hostilities. These conflicts were essentially harmless, except in one case during the battle of Spion Kopje, when "General Cronje," in his efforts to fire a wooden cannon, inadvertently dropped his fuse into a large glass bottle containing gunpowder. The effect was certainly most dramatic, and created great enthusiasm among the many audiences which viewed the completed production; but the unfortunate general, who is still an employee, was taken to the hospital, and even now, twelve years afterward, he says with a grin that whenever he has a moment of leisure he takes the time to pick a few pieces of glass from his person!

Edison's great contribution to the regular stage was the incandescent electric lamp, which enabled the production of scenic effects never before even dreamed of, but which we accept now with so much complacency. Yet with the motion picture, effects are secured that could not be reproduced to the slightest extent on the real stage. The villain, overcome by a remorseful conscience, sees on the wall of the room the very crime which he committed, with

himself as the principal actor; one of the easy effects of double exposure. The substantial and ofttimes corpulent ghost or spirit of the real stage has been succeeded by an intangible wraith, as transparent and unsubstantial as may be demanded in the best book of fairy tales—more double exposure. A man emerges from the water with a splash, ascends feet foremost ten yards or more, makes a graceful curve and lands on a spring-board, runs down it to the bank, and his clothes fly gently up from the ground and enclose his person—all unthinkable in real life, but readily possible by running the motion-picture film backward! The fairy prince commands the princess to appear, consigns the bad brothers to instant annihilation, turns the witch into a cat, confers life on inanimate things; and many more startling and apparently incomprehensible effects are carried out with actual reality, by stop-work photography. In one case, when the command for the heroine to come forth is given, the camera is stopped, the young woman walks to the desired spot, and the camera is again started; the effect to the eye—not knowing of this little by-play—is as if she had instantly appeared from space. The other effects are perhaps obvious, and the field and opportunities are absolutely unlimited. Other curious effects are secured by taking the pictures at a different speed from that at which they are exhibited. If, for example, a scene occupying thirty seconds is reproduced in ten seconds, the movements will be three times as fast, and vice versa. Many scenes familiar to the reader, showing automobiles tearing along the road and rounding

corners at an apparently reckless speed, are really pictures of slow and dignified movements reproduced at a high speed.

Brief reference has been made to motion pictures of educational subjects, and in this field there are very great opportunities for development. The study of geography, scenes and incidents in foreign countries, showing the lives and customs and surroundings of other peoples, is obviously more entertaining to the child when actively depicted on the screen than when merely described in words. The lives of great men, the enacting of important historical events, the reproduction of great works of literature, if visually presented to the child must necessarily impress his mind with greater force than if shown by mere words. We predict that the time is not far distant when, in many of our public schools, two or three hours a week will be devoted to this rational and effective form of education.

By applying microphotography to motion pictures an additional field is opened up, one phase of which may be the study of germ life and bacteria, so that our future medical students may become as familiar with the habits and customs of the *Anthrax bacillus*, for example, as of the domestic cat.

From whatever point of view the subject is approached, the fact remains that in the motion picture, perhaps more than with any other invention, Edison has created an art that must always make a special appeal to the mind and emotions of men, and although so far it has not advanced much beyond the field of amusement, it contains enormous possibilities

for serious development in the future. Let us not think too lightly of the humble five-cent theatre with its gaping crowd following with breathless interest the vicissitudes of the beautiful heroine. Before us lies an undeveloped land of opportunity which is destined to play an important part in the growth and welfare of the human race.

MR. EDISON LAUGHINGLY PROTESTING—
DECEMBER 18, 1909

MR. EDISON BUSY WRITING—
DECEMBER 18, 1909

CHAPTER XXII

THE DEVELOPMENT OF THE EDISON STORAGE BATTERY

IT is more than a hundred years since the elementary principle of the storage battery or "accumulator" was detected by a Frenchman named Gautherot; it is just fifty years since another Frenchman, named Planté, discovered that on taking two thin plates of sheet lead, immersing them in dilute sulphuric acid, and passing an electric current through the cell, the combination exhibited the ability to give back part of the original charging current, owing to the chemical changes and reactions set up. Planté coiled up his sheets into a very handy cell like a little roll of carpet or pastry; but the trouble was that the battery took a long time to "form." One sheet becoming coated with lead peroxide and the other with finely divided or spongy metallic lead, they would receive current, and then, even after a long period of inaction, furnish or return an electromotive force of from 1.85 to 2.2 volts. This ability to store up electrical energy produced by dynamos in hours otherwise idle, whether driven by steam, wind, or water, was a distinct advance in the art; but the sensational step was taken about 1880, when Faure in France and Brush in America broke away from the slow and weary process of "form-

25439

ing" the plates, and hit on clever methods of furnishing them "ready made," so to speak, by dabbing red lead onto lead-grid plates, just as butter is spread on a slice of home-made bread. This brought the storage battery at once into use as a practical, manufactured piece of apparatus; and the world was captivated with the idea. The great English scientist, Sir William Thomson, went wild with enthusiasm when a Faure "box of electricity" was brought over from Paris to him in 1881 containing a million foot-pounds of stored energy. His biographer, Dr. Sylvanus P. Thompson, describes him as lying ill in bed with a wounded leg, and watching results with an incandescent lamp fastened to his bed curtain by a safety-pin, and lit up by current from the little Faure cell. Said Sir William: "It is going to be a most valuable, practical affair—as valuable as water-cisterns to people whether they had or had not systems of water-pipes and water-supply." Indeed, in one outburst of panegyric the shrewd physicist remarked that he saw in it "a realization of the most ardently and increasingly felt scientific aspiration of his life—an aspiration which he hardly dared to expect or to see realized." A little later, however, Sir William, always cautious and canny, began to discover the inherent defects of the primitive battery, as to disintegration, inefficiency, costliness, etc., and though offered tempting inducements, declined to lend his name to its financial introduction. Nevertheless, he accepted the principle as valuable, and put the battery to actual use.

For many years after this episode, the modern lead-

lead type of battery thus brought forward with so great a flourish of trumpets had a hard time of it. Edison's attitude toward it, even as a useful supplement to his lighting system, was always one of scepticism, and he remarked contemptuously that the best storage battery he knew was a ton of coal. The financial fortunes of the battery, on both sides of the Atlantic, were as varied and as disastrous as its industrial; but it did at last emerge, and "made good." By 1905, the production of lead-lead storage batteries in the United States alone had reached a value for the year of nearly $3,000,000, and it has increased greatly since that time. The storage battery is now regarded as an important and indispensable adjunct in nearly all modern electric-lighting and electric-railway systems of any magnitude; and in 1909, in spite of its weight, it had found adoption in over ten thousand automobiles of the truck, delivery wagon, pleasure carriage, and runabout types in America.

Edison watched closely all this earlier development for about fifteen years, not changing his mind as to what he regarded as the incurable defects of the lead-lead type, but coming gradually to the conclusion that if a storage battery of some other and better type could be brought forward, it would fulfil all the early hopes, however extravagant, of such men as Kelvin (Sir William Thomson), and would become as necessary and as universal as the incandescent lamp or the electric motor. The beginning of the present century found him at his point of new departure.

Generally speaking, non-technical and uninitiated persons have a tendency to regard an invention as

being more or less the ultimate result of some happy inspiration. And, indeed, there is no doubt that such may be the fact in some instances; but in most cases the inventor has intentionally set out to accomplish a definite and desired result—mostly through the application of the known laws of the art in which he happens to be working. It is rarely, however, that a man will start out deliberately, as Edison did, to evolve a radically new type of such an intricate device as the storage battery, with only a meagre clew and a vague starting-point.

In view of the successful outcome of the problem which, in 1900, he undertook to solve, it will be interesting to review his mental attitude at that period. It has already been noted at the end of a previous chapter that on closing the magnetic iron-ore concentrating plant at Edison, New Jersey, he resolved to work on a new type of storage battery. It was about this time that, in the course of a conversation with Mr. R. H. Beach, then of the street-railway department of the General Electric Company, he said: "Beach, I don't think Nature would be so unkind as to withhold the secret of a *good* storage battery if a real earnest hunt for it is made. I'm going to hunt."

Frequently Edison has been asked what he considers the secret of achievement. To this query he has invariably replied: "Hard work, based on hard thinking." The laboratory records bear the fullest witness that he has consistently followed out this prescription to the utmost. The perfection of all his great inventions has been signalized by patient, persistent, and incessant effort which, recognizing noth-

ing short of success, has resulted in the ultimate accomplishment of his ideas. Optimistic and hopeful to a high degree, Edison has the happy faculty of beginning the day as open-minded as a child—yesterday's disappointments and failures discarded and discounted by the alluring possibilities of to-morrow.

Of all his inventions, it is doubtful whether any one of them has called forth more original thought, work, perseverance, ingenuity, and monumental patience than the one we are now dealing with. One of his associates who has been through the many years of the storage-battery drudgery with him said: "If Edison's experiments, investigations, and work on this storage battery were all that he had ever done, I should say that he was not only a notable inventor, but also a great man. It is almost impossible to appreciate the enormous difficulties that have been overcome."

From a beginning which was made practically in the dark, it was not until he had completed more than ten thousand experiments that he obtained any positive preliminary results whatever. Through all this vast amount of research there had been no previous signs of the electrical action he was looking for. These experiments had extended over many months of constant work by day and night, but there was no breakdown of Edison's faith in ultimate success—no diminution of his sanguine and confident expectations. The failure of an experiment simply meant to him that he had found something else that would *not* work, thus bringing the possible goal a little nearer by a process of painstaking elimination.

Now, however, after these many months of arduous toil, in which he had examined and tested practically all the known elements in numerous chemical combinations, the electric action he sought for had been obtained, thus affording him the first inkling of the secret that he had industriously tried to wrest from Nature. It should be borne in mind that from the very outset Edison had disdained any intention of following in the only tracks then known by employing lead and sulphuric acid as the components of a successful storage battery. Impressed with what he considered the serious inherent defects of batteries made of these materials, and the tremendously complex nature of the chemical reactions taking place in all types of such cells, he determined boldly at the start that he would devise a battery without lead, and one in which an alkaline solution could be used—a form which would, he firmly believed, be inherently less subject to decay and dissolution than the standard type, which after many setbacks had finally won its way to an annual production of many thousands of cells, worth millions of dollars.

Two or three thousand of the first experiments followed the line of his well-known primary battery in the attempted employment of copper oxide as an element in a new type of storage cell; but its use offered no advantages, and the hunt was continued in other directions and pursued until Edison satisfied himself by a vast number of experiments that nickel and iron possessed the desirable qualifications he was in search of.

This immense amount of investigation which had

consumed so many months of time, and which had culminated in the discovery of a series of reactions between nickel and iron that bore great promise, brought Edison merely within sight of a strange and hitherto unexplored country. Slowly but surely the results of the last few thousands of his preliminary experiments had pointed inevitably to a new and fruitful region ahead. He had discovered the hidden passage and held the clew which he had so industriously sought. And now, having outlined a definite path, Edison was all afire to push ahead vigorously in order that he might enter in and possess the land.

It is a trite saying that "history repeats itself," and certainly no axiom carries more truth than this when applied to the history of each of Edison's important inventions. The development of the storage battery has been no exception; indeed, far from otherwise, for in the ten years that have elapsed since the time he set himself and his mechanics, chemists, machinists, and experimenters at work to develop a practical commercial cell, the old story of incessant and persistent efforts so manifest in the working out of other inventions was fully repeated.

Very soon after he had decided upon the use of nickel and iron as the elemental metals for his storage battery, Edison established a chemical plant at Silver Lake, New Jersey, a few miles from the Orange laboratory, on land purchased some time previously. This place was the scene of the further experiments to develop the various chemical forms of nickel and iron, and to determine by tests what would be best adapted for use in cells manufactured on a com-

mercial scale. With a little handful of selected experimenters gathered about him, Edison settled down to one of his characteristic struggles for supremacy. To some extent it was a revival of the old Menlo Park days (or, rather, nights). Some of these who had worked on the preliminary experiments, with the addition of a few new-comers, toiled together regardless of passing time and often under most discouraging circumstances, but with that remarkable *esprit de corps* that has ever marked Edison's relations with his co-workers, and that has contributed so largely to the successful carrying out of his ideas.

The group that took part in these early years of Edison's arduous labors included his old-time assistant, Fred Ott, together with his chemist, J. W. Aylsworth, as well as E. J. Ross, Jr., W. E. Holland, and Ralph Arbogast, and a little later W. G. Bee, all of whom have grown up with the battery and still devote their energies to its commercial development. One of these workers, relating the strenuous experiences of these few years, says: "It was hard work and long hours, but still there were some things that made life pleasant. One of them was the supper-hour we enjoyed when we worked nights. Mr. Edison would have supper sent in about midnight, and we all sat down together, including himself. Work was forgotten for the time, and all hands were ready for fun. I have very pleasant recollections of Mr. Edison at these times. He would always relax and help to make a good time, and on some occasions I have seen him fairly overflow with animal spirits, just like a boy let out from school. After the supper-hour was over,

however, he again became the serious, energetic inventor, deeply immersed in the work at hand.

"He was very fond of telling and hearing stories, and always appreciated a joke. I remember one that he liked to get off on us once in a while. Our lighting plant was in duplicate, and about 12.30 or 1 o'clock in the morning, at the close of the supper-hour, a change would be made from one plant to the other, involving the gradual extinction of the electric lights and their slowly coming up to candle-power again, the whole change requiring probably about thirty seconds. Sometimes, as this was taking place, Edison would fold his hands, compose himself as if he were in sound sleep, and when the lights were full again would apparently wake up, with the remark, 'Well, boys, we've had a fine rest; now let's pitch into work again.'"

Another interesting and amusing reminiscence of this period of activity has been gathered from another of the family of experimenters: "Sometimes, when Mr. Edison had been working long hours, he would want to have a short sleep. It was one of the funniest things I ever witnessed to see him crawl into an ordinary roll-top desk and curl up and take a nap. If there was a sight that was still more funny, it was to see him turn over on his other side, all the time remaining in the desk. He would use several volumes of Watts's *Dictionary of Chemistry* for a pillow, and we fellows used to say that he absorbed the contents during his sleep, judging from the flow of new ideas he had on waking."

Such incidents as these serve merely to illustrate

the lighter moments that stand out in relief against the more sombre background of the strenuous years, for, of all the absorbingly busy periods of Edison's inventive life, the first five years of the storage-battery era was one of the very busiest of them all. It was not that there remained any basic principle to be discovered or simplified, for that had already been done; but it was in the effort to carry these principles into practice that there arose the numerous difficulties that at times seemed insurmountable. But, according to another co-worker, "Edison seemed pleased when he used to run up against a serious difficulty. It would seem to stiffen his backbone and make him more prolific of new ideas. For a time I thought I was foolish to imagine such a thing, but I could never get away from the impression that he really appeared happy when he ran up against a serious snag. That was in my green days, and I soon learned that the failure of an experiment never discourages him unless it is by reason of the carelessness of the man making it. Then Edison gets disgusted. If it fails on its merits, he doesn't worry or fret about it, but, on the contrary, regards it as a useful fact learned; remains cheerful and tries something else. I have known him to reverse an unsuccessful experiment and come out all right."

To follow Edison's trail in detail through the innumerable twists and turns of his experimentation and research on the storage battery, during the past ten years, would not be in keeping with the scope of this narrative, nor would it serve any useful purpose. Besides, such details would fill a big volume. The

narrative, however, would not be complete without some mention of the general outline of his work, and reference may be made briefly to a few of the chief items. And lest the reader think that the word "innumerable" may have been carelessly or hastily used above, we would quote the reply of one of the laboratory assistants when asked how many experiments had been made on the Edison storage battery since the year 1900: "Goodness only knows! We used to number our experiments consecutively from 1 to 10,000, and when we got up to 10,000 we turned back to 1 and ran up to 10,000 again, and so on. We ran through several series—I don't know how many, and have lost track of them now, but it was not far from fifty thousand."

From the very first, Edison's broad idea of his storage battery was to make perforated metallic containers having the active materials packed therein; nickel hydrate for the positive and iron oxide for the negative plate. This plan has been adhered to throughout, and has found its consummation in the present form of the completed commercial cell, but in the middle ground which stands between the early crude beginnings and the perfected type of to-day there lies a world of original thought, patient plodding, and achievement.

The first necessity was naturally to obtain the best and purest compounds for active materials. Edison found that comparatively little was known by manufacturing chemists about nickel and iron oxides of the high grade and purity he required. Hence it became necessary for him to establish his own chemical works

and put them in charge of men specially trained by himself, with whom he worked. This was the plant at Silver Lake, above referred to. Here, for several years, there was ceaseless activity in the preparation of these chemical compounds by every imaginable process and subsequent testing. Edison's chief chemist says: "We left no stone unturned to find a way of making those chemicals so that they would give the highest results. We carried on the experiments with the two chemicals together. Sometimes the nickel would be ahead in the tests, and then again it would fall behind. To stimulate us to greater improvement, Edison hung up a card which showed the results of tests in milliampere-hours given by the experimental elements as we tried them with the various grades of nickel and iron we had made. This stirred up a great deal of ambition among the boys to push the figures up. Some of our earliest tests showed around 300, but as we improved the material, they gradually crept up to over 500. Just about that time Edison made a trip to Canada, and when he came back we had made such good progress that the figures had crept up to about 1000. I well remember how greatly he was pleased."

In speaking of the development of the negative element of the battery, Mr. Aylsworth said: "In like manner the iron element had to be developed and improved; and finally the iron, which had generally enjoyed superiority in capacity over its companion, the nickel element, had to go in training in order to retain its lead, which was imperative, in order to produce a uniform and constant voltage

curve. In talking with me one day about the difficulties under which we were working and contrasting them with the phonograph experimentation, Edison said: 'In phonographic work we can use our ears and our eyes, aided with powerful microscopes; but in the battery our difficulties cannot be seen or heard, but must be observed by our mind's eye!' And by reason of the employment of such vision in the past, Edison is now able to see quite clearly through the forest of difficulties after eliminating them one by one."

The size and shape of the containing pockets in the battery plates or elements and the degree of their perforation were matters that received many years of close study and experiment; indeed, there is still today constant work expended on their perfection, although their present general form was decided upon several years ago. The mechanical construction of the battery, as a whole, in its present form, compels instant admiration on account of its beauty and completeness. Mr. Edison has spared neither thought, ingenuity, labor, nor money in the effort to make it the most complete and efficient storage cell obtainable, and the results show that his skill, judgment, and foresight have lost nothing of the power that laid the foundation of, and built up, other great arts at each earlier stage of his career.

Among the complex and numerous problems that presented themselves in the evolution of the battery was the one concerning the internal conductivity of the positive unit. The nickel hydrate was a poor electrical conductor, and although a metallic nickel

pocket might be filled with it, there would not be the desired electrical action unless a conducting substance were mixed with it, and so incorporated and packed that there would be good electrical contact throughout. This proved to be a most knotty and intricate puzzle—tricky and evasive—always leading on and promising something, and at the last slipping away leaving the work undone. Edison's remarkable patience and persistence in dealing with this trying problem and in finally solving it successfully won for him more than ordinary admiration from his associates. One of them, in speaking of the seemingly interminable experiments to overcome this trouble, said: "I guess that question of conductivity of the positive pocket brought lots of gray hairs to his head. I never dreamed a man could have such patience and perseverance. Any other man than Edison would have given the whole thing up a thousand times, but not he! Things looked awfully blue to the whole bunch of us many a time, but he was always hopeful. I remember one time things looked so dark to me that I had just about made up my mind to throw up my job, but some good turn came just then and I didn't. Now I'm glad I held on, for we've got a great future."

The difficulty of obtaining good electrical contact in the positive element was indeed Edison's chief trouble for many years. After a great amount of work and experimentation he decided upon a certain form of graphite, which seemed to be suitable for the purpose, and then proceeded to the commercial manufacture of the battery at a special factory in

Glen Ridge, New Jersey, installed for the purpose. There was no lack of buyers, but, on the contrary, the factory was unable to turn out batteries enough. The newspapers had previously published articles showing the unusual capacity and performance of the battery, and public interest had thus been greatly awakened.

Notwithstanding the establishment of a regular routine of manufacture and sale, Edison did not cease to experiment for improvement. Although the graphite apparently did the work desired of it, he was not altogether satisfied with its performance and made extended trials of other substances, but at that time found nothing that on the whole served the purpose better. Continuous tests of the commercial cells were carried on at the laboratory, as well as more practical and heavy tests in automobiles, which were constantly kept running around the adjoining country over all kinds of roads. All these tests were very closely watched by Edison, who demanded rigorously that the various trials of the battery should be carried on with all strenuousness so as to get the utmost results and develop any possible weakness. So insistent was he on this, that if any automobile should run several days without bursting a tire or breaking some part of the machine, he would accuse the chauffeur of picking out easy roads.

After these tests had been going on for some time, and some thousands of cells had been sold and were giving satisfactory results to the purchasers, the test sheets and experience gathered from various sources

pointed to the fact that occasionally a cell here and there would show up as being short in capacity. Inasmuch as the factory processes were very exact and carefully guarded, and every cell was made as uniform as human skill and care could provide, there thus arose a serious problem. Edison concentrated his powers on the investigation of this trouble, and found that the chief cause lay in the graphite. Some other minor matters also attracted his attention. What to do, was the important question that confronted him. To shut down the factory meant great loss and apparent failure. He realized this fully, but he also knew that to go on would simply be to increase the number of defective batteries in circulation, which would ultimately result in a permanent closure and real failure. Hence he took the course which one would expect of Edison's common sense and directness of action. He was not satisfied that the battery was a complete success, so he shut down and went to experimenting once more.

"And then," says one of the laboratory men, "we started on another series of record-breaking experiments that lasted over five years. I might almost say heart-breaking, too, for of all the elusive, disappointing things one ever hunted for that was the worst. But secrets have to be long-winded and roost high if they want to get away when the 'Old Man' goes hunting for them. He doesn't get mad when he misses them, but just keeps on smiling and firing, and usually brings them into camp. That's what he did on the battery, for after a whole lot of work he perfected the nickel-flake idea and process,

besides making the great improvement of using tubes instead of flat pockets for the positive. He also added a minor improvement here and there, and now we have a finer battery than we ever expected."

In the interim, while the experimentation of these last five years was in progress, many customers who had purchased batteries of the original type came knocking at the door with orders in their hands for additional outfits wherewith to equip more wagons and trucks. Edison expressed his regrets, but said he was not satisfied with the old cells and was engaged in improving them. To which the customers replied that *they* were entirely satisfied and ready and willing to pay for more batteries of the same kind; but Edison could not be moved from his determination, although considerable pressure was at times brought to bear to sway his decision.

Experiment was continued beyond the point of peradventure, and after some new machinery had been built, the manufacture of the new type of cell was begun in the early summer of 1909, and at the present writing is being extended as fast as the necessary additional machinery can be made. The product is shipped out as soon as it is completed.

The nickel flake, which is Edison's ingenious solution of the conductivity problem, is of itself a most interesting product, intensely practical in its application and fascinating in its manufacture. The flake of nickel is obtained by electroplating upon a metallic cylinder alternate layers of copper and nickel, one hundred of each, after which the combined sheet is stripped from the cylinder. So thin

are the layers that this sheet is only about the thickness of a visiting-card, and yet it is composed of two hundred layers of metal. The sheet is cut into tiny squares, each about one-sixteenth of an inch, and these squares are put into a bath where the copper is dissolved out. This releases the layers of nickel, so that each of these small squares becomes one hundred tiny sheets, or flakes, of pure metallic nickel, so thin that when they are dried they will float in the air, like thistle-down.

In their application to the manufacture of batteries, the flakes are used through the medium of a special machine, so arranged that small charges of nickel hydrate and nickel flake are alternately fed into the pockets intended for positives, and tamped down with a pressure equal to about four tons per square inch. This insures complete and perfect contact and consequent electrical conductivity throughout the entire unit.

The development of the nickel flake contains in itself a history of patient investigation, labor, and achievement, but we have not space for it, nor for tracing the great work that has been done in developing and perfecting the numerous other parts and adjuncts of this remarkable battery. Suffice it to say that when Edison went boldly out into new territory, after something entirely unknown, he was quite prepared for hard work and exploration. He encountered both in unstinted measure, but kept on going forward until, after long travel, he had found all that he expected and accomplished something more beside. Nature *did* respond to his whole-

hearted appeal, and, by the time the hunt was ended, revealed a good storage battery of entirely new type. Edison not only recognized and took advantage of the principles he had discovered, but in adapting them for commercial use developed most ingenious processes and mechanical appliances for carrying his discoveries into practical effect. Indeed, it may be said that the invention of an enormous variety of new machines and mechanical appliances rendered necessary by each change during the various stages of development of the battery, from first to last, stands as a lasting tribute to the range and versatility of his powers.

It is not within the scope of this narrative to enter into any description of the relative merits of the Edison storage battery, that being the province of a commercial catalogue. It does, however, seem entirely allowable to say that while at the present writing the tests that have been made extend over a few years only, their results and the intrinsic value of this characteristic Edison invention are of such a substantial nature as to point to the inevitable growth of another great industry arising from its manufacture, and to its wide-spread application to many uses.

The principal use that Edison has had in mind for his battery is transportation of freight and passengers by truck, automobile, and street-car. The greatly increased capacity in proportion to weight of the Edison cell makes it particularly adaptable for this class of work on account of the much greater radius of travel that is possible by its use. The latter point

of advantage is the one that appeals most to the automobilist, as he is thus enabled to travel, it is asserted, more than three times farther than ever before on a single charge of the battery.

Edison believes that there are important advantages possible in the employment of his storage battery for street-car propulsion. Under the present system of operation, a plant furnishing the electric power for street railways must be large enough to supply current for the maximum load during "rush hours," although much of the machinery may be lying idle and unproductive in the hours of minimum load. By the use of storage-battery cars, this immense and uneconomical maximum investment in plant can be cut down to proportions of true commercial economy, as the charging of the batteries can be conducted at a uniform rate with a reasonable expenditure for generating machinery. Not only this, but each car becomes an independently moving unit, not subject to delay by reason of a general breakdown of the power plant or of the line. In addition to these advantages, the streets would be freed from their burden of trolley wires or conduits. To put his ideas into practice, Edison built a short railway line at the Orange works in the winter of 1909–10, and, in co-operation with Mr. R. H. Beach, constructed a special type of street-car, and equipped it with motor, storage battery, and other necessary operating devices. This car was subsequently put upon the street-car lines in New York City, and demonstrated its efficiency so completely that it was purchased by one of the street-car companies, which has since ordered

additional cars for its lines. The demonstration of this initial car has been watched with interest by many railroad officials, and its performance has been of so successful a nature that at the present writing (the summer of 1910) it has been necessary to organize and equip a preliminary factory in which to construct many other cars of a similar type that have been ordered by other street-railway companies. This enterprise will be conducted by a corporation which has been specially organized for the purpose. Thus, there has been initiated the development of a new and important industry whose possible ultimate proportions are beyond the range of present calculation. Extensive as this industry may become, however, Edison is firmly convinced that the greatest field for his storage battery lies in its adaptation to commercial trucking and hauling, and to pleasure vehicles, in comparison with which the street-car business—even with its great possibilities—will not amount to more than 1 per cent.

Edison has pithily summed up his work and his views in an article on "The To-Morrows of Electricity and Invention" in *Popular Electricity* for June, 1910, in which he says: "For years past I have been trying to perfect a storage battery, and have now rendered it entirely suitable to automobile and other work. There is absolutely no reason why horses should be allowed within city limits; for between the gasoline and the electric car, no room is left for them. They are not needed. The cow and the pig have gone, and the horse is still more undesirable. A higher public ideal of health and cleanliness is working tow-

ard such banishment very swiftly; and then we shall have decent streets, instead of stables made out of strips of cobblestones bordered by sidewalks. The worst use of money is to make a fine thoroughfare, and then turn it over to horses. Besides that, the change will put the humane societies out of business. Many people now charge their own batteries because of lack of facilities; but I believe central stations will find in this work very soon the largest part of their load. The New York Edison Company, or the Chicago Edison Company, should have as much current going out for storage batteries as for power motors; and it will be so some near day."

CHAPTER XXIII

MISCELLANEOUS INVENTIONS

IT has been the endeavor in this narrative to group Edison's inventions and patents so that his work in the different fields can be studied independently and separately. The history of his career has therefore fallen naturally into a series of chapters, each aiming to describe some particular development or art; and, in a way, the plan has been helpful to the writers while probably useful to the readers. It happens, however, that the process has left a vast mass of discovery and invention wholly untouched, and relegates to a concluding brief chapter some of the most interesting episodes of a fruitful life. Any one who will turn to the list of Edison patents at the end of the book will find a large number of things of which not even casual mention has been made, but which at the time occupied no small amount of the inventor's time and attention, and many of which are now part and parcel of modern civilization. Edison has, indeed, touched nothing that he did not in some way improve. As Thoreau said: "The laws of the Universe are not indifferent, but are forever on the side of the most sensitive," and there never was any one more sensitive to the defects of every art and appliance, nor any one more active in

applying the law of evolution. It is perhaps this many-sidedness of Edison that has impressed the multitude, and that in the "popular vote" taken a couple of years ago by the *New York Herald* placed his name at the head of the list of ten greatest living Americans. It is curious and pertinent to note that a similar plebiscite taken by a technical journal among its expert readers had exactly the same result. Evidently the public does not agree with the opinion expressed by the eccentric artist Blake in his "Marriage of Heaven and Hell," when he said: "Improvement makes strange roads; but the crooked roads without improvements are roads of Genius."

The product of Edison's brain may be divided into three classes. The first embraces such arts and industries, or such apparatus, as have already been treated. The second includes devices like the tasimeter, phonomotor, odoroscope, etc., and others now to be noted. The third embraces a number of projected inventions, partially completed investigations, inventions in use but not patented, and a great many caveats filed in the Patent Office at various times during the last forty years for the purpose of protecting his ideas pending their contemplated realization in practice. These caveats served their purpose thoroughly in many instances, but there have remained a great variety of projects upon which no definite action was ever taken. One ought to add the contents of an unfinished piece of extraordinary fiction based wholly on new inventions and devices utterly unknown to mankind. Some day the novel may be finished, but Edison has no inclination to go back to it, and says he cannot under-

stand how any man is able to make a speech or write a book, for he simply can't do it.

After what has been said in previous chapters, it will not seem so strange that Edison should have hundreds of dormant inventions on his hands. There are human limitations even for such a tireless worker as he is. While the preparation of data for this chapter was going on, one of the writers in discussing with him the vast array of unexploited things said: "Don't you feel a sense of regret in being obliged to leave so many things uncompleted?" To which he replied: "What's the use? One lifetime is too short, and I am busy every day improving essential parts of my established industries." It must suffice to speak briefly of a few leading inventions that have been worked out, and to dismiss with scant mention all the rest, taking just a few items, as typical and suggestive, especially when Edison can himself be quoted as to them. Incidentally it may be noted that things, not words, are referred to; for Edison, in addition to inventing the apparatus, has often had to coin the word to describe it. A large number of the words and phrases in modern electrical parlance owe their origin to him. Even the "call-word" of the telephone, "Hello!" sent tingling over the wire a few million times daily was taken from Menlo Park by men installing telephones in different parts of the world, men who had just learned it at the laboratory, and thus made it a universal sesame for telephonic conversation.

It is hard to determine where to begin with Edison's miscellaneous inventions, but perhaps telegraphy has the "right of line," and Edison's work in that field

puts him abreast of the latest wireless developments that fill the world with wonder. "I perfected a system of train telegraphy between stations and trains in motion whereby messages could be sent from the moving train to the central office; and this was the forerunner of wireless telegraphy. This system was used for a number of years on the Lehigh Valley Railroad on their construction trains. The electric wave passed from a piece of metal on top of the car across the air to the telegraph wires; and then proceeded to the despatcher's office. In my first experiments with this system I tried it on the Staten Island Railroad, and employed an operator named King to do the experimenting. He reported results every day, and received instructions by mail; but for some reason he could send messages all right when the train went in one direction, but could not make it go in the contrary direction. I made suggestions of every kind to get around this phenomenon. Finally I telegraphed King to find out if he had any suggestions himself; and I received a reply that the only way he could propose to get around the difficulty was to put the island on a pivot so it could be turned around! I found the trouble finally, and the practical introduction on the Lehigh Valley road was the result. The system was sold to a very wealthy man, and he would never sell any rights or answer letters. He became a spiritualist subsequently, which probably explains it." It is interesting to note that Edison became greatly interested in the later developments by Marconi, and is an admiring friend and adviser of that well-known inventor.

The earlier experiments with wireless telegraphy at

Menlo Park were made at a time when Edison was greatly occupied with his electric-light interests, and it was not until the beginning of 1886 that he was able to spare the time to make a public demonstration of the system as applied to moving trains. Ezra T. Gilliland, of Boston, had become associated with him in his experiments, and they took out several joint patents subsequently. The first practical use of the system took place on a thirteen-mile stretch of the Staten Island Railroad with the results mentioned by Edison above.

A little later, Edison and Gilliland joined forces with Lucius J. Phelps, another investigator, who had been experimenting along the same lines and had taken out several patents. The various interests were combined in a corporation under whose auspices the system was installed on the Lehigh Valley Railroad, where it was used for several years. The official demonstration trip on this road took place on October 6, 1887, on a six-car train running to Easton, Pennsylvania, a distance of fifty-four miles. A great many telegrams were sent and received while the train was at full speed, including a despatch to the "cable king," John Pender, London, England, and a reply from him.[1]

[1] Broadly described in outline, the system consisted of an induction circuit obtained by laying strips of tin along the top or roof of a railway car, and the installation of a special telegraph line running parallel with the track and strung on poles of only medium height. The train and also each signalling station were equipped with regulation telegraphic apparatus, such as battery, key, relay, and sounder, together with induction-coil and condenser. In addition, there was a transmitting device in the shape of a musical reed, or buzzer. In practice, this buzzer was continuously

Although the space between the cars and the pole line was probably not more than about fifty feet, it is interesting to note that in Edison's early experiments at Menlo Park he succeeded in transmitting messages through the air at a distance of 580 feet. Speaking of this and of his other experiments with induction telegraphy by means of kites, communicating from one to the other and thus from the kites to instruments on the earth, Edison said recently: "We only transmitted about two and one-half miles through the kites. What has always puzzled me since is that I did not think of using the results of my experiments on 'etheric force' that I made in 1875. I have never been able to understand how I came to overlook them. If I had made use of my own work I should have had long-distance wireless telegraphy."

In one of the appendices to this book is given a brief technical account of Edison's investigations of the phenomena which lie at the root of modern wireless or "space" telegraphy, and the attention of the reader is directed particularly to the description and quotations there from the famous note-books of Edison's experiments in regard to what he called "etheric force." It will be seen that as early as 1875 Edison detected and studied certain phenomena—*i. e.*, the production of electrical effects in non-closed circuits, which for a time made him think he was on the trail of a new

operated at high speed by a battery. Its vibrations were broken by means of a key into long and short periods, representing Morse characters, which were transmitted inductively from the train circuit to the pole line, or vice versa, and received by the operator at the other end through a high-resistance telephone receiver inserted in the secondary circuit of the induction-coil.

force, as there was no plausible explanation for them by the then known laws of electricity and magnetism. Later came the magnificent work of Hertz identifying the phenomena as "electromagnetic waves" in the ether, and developing a new world of theory and science based upon them and their production by disruptive discharges.

Edison's assertions were treated with scepticism by the scientific world, which was not then ready for the discovery and not sufficiently furnished with corroborative data. It is singular, to say the least, to note how Edison's experiments paralleled and proved in advance those that came later; and even his apparatus such as the "dark box" for making the tiny sparks visible (as the waves impinged on the receiver) bears close analogy with similar apparatus employed by Hertz. Indeed, as Edison sent the dark-box apparatus to the Paris Exposition in 1881, and let Batchelor repeat there the puzzling experiments, it seems by no means unlikely that, either directly or on the report of some friend, Hertz may thus have received from Edison a most valuable suggestion, the inventor aiding the physicist in opening up a wonderful new realm. In this connection, indeed, it is very interesting to quote two great authorities. In May, 1889, at a meeting of the Institution of Electrical Engineers in London, Dr. (now Sir) Oliver Lodge remarked in a discussion on a paper of his own on lightning conductors, embracing the Hertzian waves in its treatment: "Many of the effects I have shown—sparks in unsuspected places and other things—have been observed before. Henry observed things of the kind and Edison

noticed some curious phenomena, and said it was not electricity but 'etheric force' that caused these sparks; and the matter was rather pooh-poohed. It was a small part of *this very thing;* only the time was not ripe; theoretical knowledge was not ready for it." Again in his "Signalling without Wires," in giving the history of the coherer principle, Lodge remarks: "Sparks identical in all respects with those discovered by Hertz had been seen in recent times both by Edison and by Sylvanus Thompson, being styled 'etheric force' by the former; but their theoretic significance had not been perceived, and they were somewhat sceptically regarded." During the same discussion in London, in 1889, Sir William Thomson (Lord Kelvin), after citing some experiments by Faraday with his insulated cage at the Royal Institution, said: "His (Faraday's) attention was not directed to look for Hertz sparks, or probably he might have found them in the interior. Edison seems to have noticed something of the kind in what he called 'etheric force.' His name 'etheric' may thirteen years ago have seemed to many people absurd. But now we are all beginning to call these inductive phenomena 'etheric.' " With which testimony from the great Kelvin as to his priority in determining the vital fact, and with the evidence that as early as 1875 he built apparatus that demonstrated the fact, Edison is probably quite content.

It should perhaps be noted at this point that a curious effect observed at the laboratory was shown in connection with Edison lamps at the Philadelphia Exhibition of 1884. It became known in scientific

parlance as the "Edison effect," showing a curious current condition or discharge in the vacuum of the bulb. It has since been employed by Fleming in England and De Forest in this country, and others, as the basis for wireless-telegraph apparatus. It is in reality a minute rectifier of alternating current, and analogous to those which have since been made on a large scale.

When Roentgen came forward with his discovery of the new "X"-ray in 1895, Edison was ready for it, and took up experimentation with it on a large scale; some of his work being recorded in an article in the *Century Magazine* of May, 1896, where a great deal of data may be found. Edison says with regard to this work: "When the X-ray came up, I made the first fluoroscope, using tungstate of calcium. I also found that this tungstate could be put into a vacuum chamber of glass and fused to the inner walls of the chamber; and if the X-ray electrodes were let into the glass chamber and a proper vacuum was attained, you could get a fluorescent lamp of several candle-power. I started in to make a number of these lamps, but I soon found that the X-ray had affected poisonously my assistant, Mr. Dally, so that his hair came out and his flesh commenced to ulcerate. I then concluded it would not do, and that it would not be a very popular kind of light; so I dropped it.

"At the time I selected tungstate of calcium because it was so fluorescent, I set four men to making all kinds of chemical combinations, and thus collected upward of 8000 different crystals of various chemical combinations, discovering several hundred different sub-

stances which would fluoresce to the X-ray. So far little had come of X-ray work, but it added another letter to the scientific alphabet. I don't know anything about radium, and I have lots of company." The *Electrical Engineer* of June 3, 1896, contains a photograph of Mr. Edison taken by the light of one of his fluorescent lamps. The same journal in its issue of April 1, 1896, shows an Edison fluoroscope in use by an observer, in the now familiar and universal form somewhat like a stereoscope. This apparatus as invented by Edison consists of a flaring box, curved at one end to fit closely over the forehead and eyes, while the other end of the box is closed by a pasteboard cover. On the inside of this is spread a layer of tungstate of calcium. By placing the object to be observed, such as the hand, between the vacuum-tube and the fluorescent screen, the "shadow" is formed on the screen and can be observed at leisure. The apparatus has proved invaluable in surgery and has become an accepted part of the equipment of modern surgery. In 1896, at the Electrical Exhibition in the Grand Central Palace, New York City, given under the auspices of the National Electric Light Association, thousands and thousands of persons with the use of this apparatus in Edison's personal exhibit were enabled to see their own bones; and the resultant public sensation was great. Mr. Mallory tells a characteristic story of Edison's own share in the memorable exhibit: "The exhibit was announced for opening on Monday. On the preceding Friday all the apparatus, which included a large induction-coil, was shipped from Orange to New York, and on Saturday afternoon

Edison, accompanied by Fred Ott, one of his assistants, and myself, went over to install it so as to have it ready for Monday morning. Had everything been normal, a few hours would have sufficed for completion of the work, but on coming to test the big coil, it was found to be absolutely out of commission, having been so seriously injured as to necessitate its entire rewinding. It being summer-time, all the machine shops were closed until Monday morning, and there were several miles of wire to be wound on the coil. Edison would not consider a postponement of the exhibition, so there was nothing to do but go to work and wind it by hand. We managed to find a lathe, but there was no power; so each of us, including Edison, took turns revolving the lathe by pulling on the belt, while the other two attended to the winding of the wire. We worked continuously all through that Saturday night and all day Sunday until evening, when we finished the job. I don't remember ever being conscious of more muscles in my life. I guess Edison was tired also, but he took it very philosophically." This was apparently the first public demonstration of the X-ray to the American public.

Edison's ore-separation work has been already fully described, but the story would hardly be complete without a reference to similar work in gold extraction, dating back to the Menlo Park days: "I got up a method," says Edison, "of separating placer gold by a dry process, in which I could work economically ore as lean as five cents of gold to the cubic yard. I had several car-loads of different placer sands sent to me and proved I could do it. Some parties hearing I had

succeeded in doing such a thing went to work and got hold of what was known as the Ortiz mine grant, twelve miles from Santa Fé, New Mexico. This mine, according to the reports of several mining engineers made in the last forty years, was considered one of the richest placer deposits in the United States, and various schemes had been put forward to bring water from the mountains forty miles away to work those immense beds. The reports stated that the Mexicans had been panning gold for a hundred years out of these deposits.

"These parties now made arrangements with the stockholders or owners of the grant, and with me, to work the deposits by my process. As I had had some previous experience with the statements of mining men, I concluded I would just send down a small plant and prospect the field before putting up a large one. This I did, and I sent two of my assistants, whom I could trust, down to this place to erect the plant; and started to sink shafts fifty feet deep all over the area. We soon learned that the rich gravel, instead of being spread over an area of three by seven miles, and rich from the grass roots down, was spread over a space of about twenty-five acres, and that even this did not average more than ten cents to the cubic yard. The whole placer would not give more than one and one-quarter cents per cubic yard. As my business arrangements had not been very perfectly made, I lost the usual amount."

Going to another extreme, we find Edison grappling with one of the biggest problems known to the authorities of New York—the disposal of its heavy snows.

It is needless to say that witnessing the ordinary slow and costly procedure would put Edison on his mettle. "One time when they had a snow blockade in New York I started to build a machine with Batchelor—a big truck with a steam-engine and compressor on it. We would run along the street, gather all the snow up in front of us, pass it into the compressor, and deliver little blocks of ice behind us in the gutter, taking one-tenth the room of the snow, and not inconveniencing anybody. We could thus take care of a snow-storm by diminishing the bulk of material to be handled. The preliminary experiment we made was dropped because we went into other things. The machine would go as fast as a horse could walk."

Edison has always taken a keen interest in aerial flight, and has also experimented with aeroplanes, his preference inclining to the helicopter type, as noted in the newspapers and periodicals from time to time. The following statement from him refers to a type of aeroplane of great novelty and ingenuity: "James Gordon Bennett came to me and asked that I try some primary experiments to see if aerial navigation was feasible with 'heavier-than-air' machines. I got up a motor and put it on the scales and tried a large number of different things and contrivances connected to the motor, to see how it would lighten itself on the scales. I got some data and made up my mind that what was needed was a very powerful engine for its weight, in small compass. So I conceived of an engine employing guncotton. I took a lot of ticker paper tape, turned it into guncotton and got up an engine with an arrangement whereby I could feed this gun-

cotton strip into the cylinder and explode it inside electrically. The feed took place between two copper rolls. The copper kept the temperature down, so that it could only explode up to the point where it was in contact with the feed rolls. It worked pretty well; but once the feed roll didn't save it, and the flame went through and exploded the whole roll and kicked up such a bad explosion I abandoned it. But the idea might be made to work."

Turning from the air to the earth, it is interesting to note that the introduction of the underground Edison system in New York made an appeal to inventive ingenuity and that one of the difficulties was met as follows: "When we first put the Pearl Street station in operation, in New York, we had cast-iron junction-boxes at the intersections of all the streets. One night, or about two o'clock in the morning, a policeman came in and said that something had exploded at the corner of William and Nassau streets. I happened to be in the station, and went out to see what it was. I found that the cover of the manhole, weighing about 200 pounds, had entirely disappeared, but everything inside was intact. It had even stripped some of the threads of the bolts, and we could never find that cover. I concluded it was either leakage of gas into the manhole, or else the acid used in pickling the casting had given off hydrogen, and air had leaked in, making an explosive mixture. As this was a pretty serious problem, and as we had a good many of the manholes, it worried me very much for fear that it would be repeated and the company might have to pay a lot of damages, especially in districts like that

around William and Nassau, where there are a good many people about. If an explosion took place in the daytime it might lift a few of them up. However, I got around the difficulty by putting a little bottle of chloroform in each box, corked up, with a slight hole in the cork. The chloroform being volatile and very heavy, settled in the box and displaced all the air. I have never heard of an explosion in a manhole where this chloroform had been used. Carbon tetrachloride, now made electrically at Niagara Falls, is very cheap and would be ideal for the purpose."

Edison has never paid much attention to warfare, and has in general disdained to develop inventions for the destruction of life and property. Some years ago, however, he became the joint inventor of the Edison-Sims torpedo, with Mr. W. Scott Sims, who sought his co-operation. This is a dirigible submarine torpedo operated by electricity. In the torpedo proper, which is suspended from a long float so as to be submerged a few feet under water, are placed the small electric motor for propulsion and steering, and the explosive charge. The torpedo is controlled from the shore or ship through an electric cable which it pays out as it goes along, and all operations of varying the speed, reversing, and steering are performed at the will of the distant operator by means of currents sent through the cable. During the Spanish-American War of 1898 Edison suggested to the Navy Department the adoption of a compound of calcium carbide and calcium phosphite, which when placed in a shell and fired from a gun would explode as soon as it struck water and ignite, producing a blaze that would continue several

minutes and make the ships of the enemy visible for four or five miles at sea. Moreover, the blaze could not be extinguished.

Edison has always been deeply interested in "conservation," and much of his work has been directed toward the economy of fuel in obtaining electrical energy directly from the consumption of coal. Indeed, it will be noted that the example of his handwriting shown in these volumes deals with the importance of obtaining available energy direct from the combustible without the enormous loss in the intervening stages that makes our best modern methods of steam generation and utilization so barbarously extravagant and wasteful. Several years ago, experimenting in this field, Edison devised and operated some ingenious pyromagnetic motors and generators, based, as the name implies, on the direct application of heat to the machines. The motor is founded upon the principle discovered by the famous Dr. William Gilbert—court physician to Queen Elizabeth, and the Father of modern electricity—that the magnetic properties of iron diminish with heat. At a light-red heat, iron becomes non-magnetic, so that a strong magnet exerts no influence over it. Edison employed this peculiar property by constructing a small machine in which a pivoted bar is alternately heated and cooled. It is thus attracted toward an adjacent electromagnet when cold and is uninfluenced when hot; and as the result motion is produced.

The pyromagnetic generator is based on the same phenomenon; its aim being of course to generate electrical energy directly from the heat of the combustible.

The armature, or moving part of the machine, consists in reality of eight separate armatures all constructed of corrugated sheet iron covered with asbestos and wound with wire. These armatures are held in place by two circular iron plates, through the centre of which runs a shaft, carrying at its lower extremity a semicircular shield of fire-clay, which covers the ends of four of the armatures. The heat, of whatever origin, is applied from below, and the shaft being revolved, four of the armatures lose their magnetism constantly, while the other four gain it, so to speak. As the moving part revolves, therefore, currents of electricity are set up in the wires of the armatures and are collected by a commutator, as in an ordinary dynamo, placed on the upper end of the central shaft.

A great variety of electrical instruments are included in Edison's inventions, many of these in fundamental or earlier forms being devised for his systems of light and power, as noted already. There are numerous others, and it might be said with truth that Edison is hardly ever without some new device of this kind in hand, as he is by no means satisfied with the present status of electrical measurements. He holds in general that the meters of to-day, whether for heavy or for feeble currents, are too expensive, and that cheaper instruments are a necessity of the times. These remarks apply more particularly to what may be termed, in general, circuit meters. In other classes Edison has devised an excellent form of magnetic bridge, being an ingenious application of the principles of the familiar Wheatstone bridge, used so extensively for measuring the electrical resistance of wires; the

testing of iron for magnetic qualities being determined by it in the same way. Another special instrument is a "dead beat" galvanometer which differs from the ordinary form of galvanometer in having no coils or magnetic needle. It depends for its action upon the heating effect of the current, which causes a fine platinum-iridium wire enclosed in a glass tube to expand; thus allowing a coiled spring to act on a pivoted shaft carrying a tiny mirror. The mirror as it moves throws a beam of light upon a scale and the indications are read by the spot of light. Most novel of all the apparatus of this measuring kind is the odoroscope, which is like the tasimeter described in an earlier chapter, except that a strip of gelatine takes the place of hard rubber, as the sensitive member. Besides being affected by heat, this device is exceedingly sensitive to moisture. A few drops of water or perfume thrown on the floor of a room are sufficient to give a very decided indication on the galvanometer in circuit with the instrument. Barometers, hygrometers, and similar instruments of great delicacy can be constructed on the principle of the odoroscope; and it may also be used in determining the character or pressure of gases and vapors in which it has been placed.

In the list of Edison's patents at the end of this work may be noted many other of his miscellaneous inventions, covering items such as preserving fruit *in vacuo*, making plate-glass, drawing wire, and metallurgical processes for treatment of nickel, gold, and copper ores; but to mention these inventions separately would trespass too much on our limited space

here. Hence, we shall leave the interested reader to examine that list for himself.

From first to last Edison has filed in the United States Patent Office—in addition to more than 1400 applications for patents—some 120 caveats embracing not less than 1500 inventions. A "caveat" is essentially a notice filed by an inventor, entitling him to receive warning from the Office of any application for a patent for an invention that would "interfere" with his own, during the year, while he is supposed to be perfecting his device. The old caveat system has now been abolished, but it served to elicit from Edison a most astounding record of ideas and possible inventions upon which he was working, and many of which he of course reduced to practice. As an example of Edison's fertility and the endless variety of subjects engaging his thoughts, the following list of matters covered by *one* caveat is given. It is needless to say that all the caveats are not quite so full of "plums," but this is certainly a wonder.

Forty-one distinct inventions relating to the phonograph, covering various forms of recorders, arrangement of parts, making of records, shaving tool, adjustments, etc.

Eight forms of electric lamps using infusible earthy oxides and brought to high incandescence *in vacuo* by high potential current of several thousand volts; same character as impingement of X-rays on object in bulb.

A loud-speaking telephone with quartz cylinder and beam of ultra-violet light.

Four forms of arc light with special carbons.

A thermostatic motor.

A device for sealing together the inside part and bulb of an incandescent lamp mechanically.

Regulators for dynamos and motors.

Three devices for utilizing vibrations beyond the ultra violet.

A great variety of methods for coating incandescent lamp filaments with silicon, titanium, chromium, osmium, boron, etc.

Several methods of making porous filaments.

Several methods of making squirted filaments of a variety of materials, of which about thirty are specified.

Seventeen different methods and devices for separating magnetic ores.

A continuously operative primary battery.

A musical instrument operating one of Helmholtz's artificial larynxes.

A siren worked by explosion of small quantities of oxygen and hydrogen mixed.

Three other sirens made to give vocal sounds or articulate speech.

A device for projecting sound-waves to a distance without spreading and in a straight line, on the principle of smoke rings.

A device for continuously indicating on a galvanometer the depths of the ocean.

A method of preventing in a great measure friction of water against the hull of a ship and incidentally preventing fouling by barnacles.

A telephone receiver whereby the vibrations of the diaphragm are considerably amplified.

Two methods of "space" telegraphy at sea.

An improved and extended string telephone.

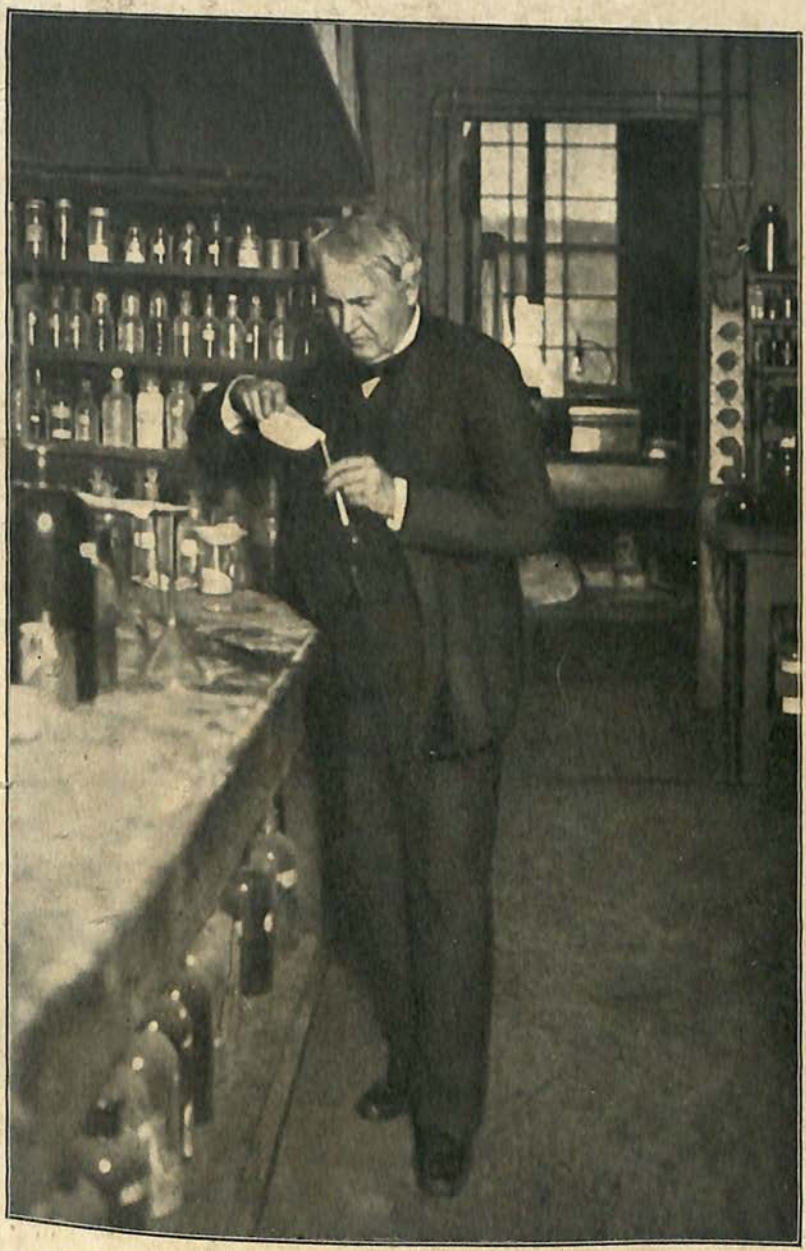

EDISON AT WORK IN ONE OF THE CHEMICAL ROOMS AT THE ORANGE LABORATORY

Devices and method of talking through water for considerable distances.

An audiphone for deaf people.

Sound-bridge for measuring resistance of tubes and other materials for conveying sound.

A method of testing a magnet to ascertain the existence of flaws in the iron or steel composing the same.

Method of distilling liquids by incandescent conductor immersed in the liquid.

Method of obtaining electricity direct from coal.

An engine operated by steam produced by the hydration and dehydration of metallic salts.

Device and method for telegraphing photographically.

Carbon crucible kept brilliantly incandescent by current *in vacuo*, for obtaining reaction with refractory metals.

Device for examining combinations of odors and their changes by rotation at different speeds.

From one of the preceding items it will be noted that even in the eighties Edison perceived much advantage to be gained in the line of economy by the use of lamp filaments employing refractory metals in their construction. From another caveat, filed in 1889, we extract the following, which shows that he realized the value of tungsten also for this purpose. "Filaments of carbon placed in a combustion tube with a little chloride ammonium. Chloride tungsten or titanium passed through hot tube, depositing a film of metal on the carbon; or filaments of zirconia oxide, or alumina or magnesia, thoria or other infusible oxides mixed or separate, and obtained by moistening and squirting

through a die, are thus coated with above metals and used for incandescent lamps. Osmium from a volatile compound of same thus deposited makes a filament as good as carbon when *in vacuo.*"

In 1888, long before there arose the actual necessity of duplicating phonograph records so as to produce replicas in great numbers, Edison described in one of his caveats a method and process much similar to the one which was put into practice by him in later years. In the same caveat he describes an invention whereby the power to indent on a phonograph cylinder, instead of coming directly from the voice, is caused by power derived from the rotation or movement of the phonogram surface itself. He did not, however, follow up this invention and put it into practice. Some twenty years later it was independently invented and patented by another inventor. A further instance of this kind is a method of telegraphy at sea by means of a diaphragm in a closed port-hole flush with the side of the vessel, and actuated by a steam-whistle which is controlled by a lever, similarly to a Morse key. A receiving diaphragm is placed in another and near-by chamber, which is provided with very sensitive stethoscopic ear-pieces, by which the Morse characters sent from another vessel may be received. This was also invented later by another inventor, and is in use to-day, but will naturally be rivalled by wireless telegraphy. Still another instance is seen in one of Edison's caveats, where he describes a method of distilling liquids by means of internally applied heat through electric conductors. Although Edison did not follow up the idea and take out a patent, this system of distillation was

later hit upon by others and is in use at the present time.

In the foregoing pages of this chapter the authors have endeavored to present very briefly a sketchy notion of the astounding range of Edison's practical ideas, but they feel a sense of impotence in being unable to deal adequately with the subject in the space that can be devoted to it. To those who, like the authors, have had the privilege of examining the voluminous records which show the flights of his imagination, there comes a feeling of utter inadequacy to convey to others the full extent of the story they reveal.

The few specific instances above related, although not representing a tithe of Edison's work, will probably be sufficient to enable the reader to appreciate to some extent his great wealth of ideas and fertility of imagination, and also to realize that this imagination is not only intensely practical, but that it works prophetically along lines of natural progress.

CHAPTER XXIV

EDISON'S METHOD IN INVENTING

WHILE the world's progress depends largely upon their ingenuity, inventors are not usually persons who have adopted invention as a distinct profession, but, generally speaking, are otherwise engaged in various walks of life. By reason of more or less inherent native genius they either make improvements along lines of present occupation, or else evolve new methods and means of accomplishing results in fields for which they may have personal predilections.

Now and then, however, there arises a man so greatly endowed with natural powers and originality that the creative faculty within him is too strong to endure the humdrum routine of affairs, and manifests itself in a life devoted entirely to the evolution of methods and devices calculated to further the world's welfare. In other words, he becomes an inventor by profession. Such a man is Edison. Notwithstanding the fact that nearly forty years ago (not a great while after he had emerged from the ranks of peripatetic telegraph operators) he was the owner of a large and profitable business as a manufacturer of the telegraphic apparatus invented by him, the call of his nature was too strong to allow of profits being laid

away in the bank to accumulate. As he himself has said, he has "too sanguine a temperament to allow money to stay in solitary confinement." Hence, all superfluous cash was devoted to experimentation. In the course of years he grew more and more impatient of the shackles that bound him to business routine, and, realizing the powers within him, he drew away gradually from purely manufacturing occupations, determining deliberately to devote his life to inventive work, and to depend upon its results as a means of subsistence.

All persons who make inventions will necessarily be more or less original in character, but to the man who chooses to become an inventor by profession must be conceded a mind more than ordinarily replete with virility and originality. That these qualities in Edison are superabundant is well known to all who have worked with him, and, indeed, are apparent to every one from his multiplied achievements within the period of one generation.

If one were allowed only two words with which to describe Edison, it is doubtful whether a close examination of the entire dictionary would disclose any others more suitable than "experimenter—inventor." These would express the overruling characteristics of his eventful career. It is as an "inventor" that he sets himself down in the membership list of the American Institute of Electrical Engineers. To attempt the strict placing of these words in relation to each other (except alphabetically) would be equal to an endeavor to solve the old problem as to which came first, the egg or the chicken; for although all

his inventions have been evolved through experiment, many of his notable experiments have called forth the exercise of highly inventive faculties in their very inception. Investigation and experiment have been a consuming passion, an impelling force from within, as it were, from his petticoat days when he collected goose-eggs and tried to hatch them out by sitting over them himself. One might be inclined to dismiss this trivial incident smilingly, as a mere childish, thoughtless prank, had not subsequent development as a child, boy, and man revealed a born investigator with original reasoning powers that, disdaining crooks and bends, always aimed at the centre, and, like the flight of the bee, were accurate and direct.

It is not surprising, therefore, that a man of this kind should exhibit a ceaseless, absorbing desire for knowledge, and an apparently uncontrollable tendency to experiment on every possible occasion, even though his last cent were spent in thus satisfying the insatiate cravings of an inquiring mind.

During Edison's immature years, when he was flitting about from place to place as a telegraph operator, his experimentation was of a desultory, hand-to-mouth character, although it was always notable for originality, as expressed in a number of minor useful devices produced during this period. Small wonder, then, that at the end of these wanderings, when he had found a place to "rest the sole of his foot," he established a laboratory in which to carry on his researches in a more methodical and practical manner. In this was the beginning of the

work which has since made such a profound impression on contemporary life.

There is nothing of the helter-skelter, slap-dash style in Edison's experiments. Although all the laboratory experimenters agree in the opinion that he "tries everything," it is not merely the mixing of a little of this, some of that, and a few drops of the other, in the *hope* that *something* will come of it. Nor is the spirit of the laboratory work represented in the following dialogue overheard between two alleged carpenters picked up at random to help on a hurry job.

"How near does she fit, Mike?"

"About an inch."

"Nail her!"

A most casual examination of any of the laboratory records will reveal evidence of the minutest exactitude insisted on in the conduct of experiments, irrespective of the length of time they occupied. Edison's instructions, always clear cut and direct, followed by his keen oversight, admit of nothing less than implicit observance in all details, no matter where they may lead, and impel to the utmost minuteness and accuracy.

To some extent there has been a popular notion that many of Edison's successes have been due to mere dumb fool luck—to blind, fortuitous "happenings." Nothing could be further from the truth, for, on the contrary, it is owing almost entirely to the comprehensive scope of his knowledge, the breadth of his conception, the daring originality of his methods, and minuteness and extent of experiment, com-

bined with unwavering pertinacity, that new arts have been created and additions made to others already in existence. Indeed, without this tireless minutiæ, and methodical, searching spirit, it would have been practically impossible to have produced many of the most important of these inventions.

Needless to say, mastery of its literature is regarded by him as a most important preliminary in taking up any line of investigation. What others may have done, bearing directly or collaterally on the subject, in print, is carefully considered and sifted to the point of exhaustion. Not that he takes it for granted that the conclusions are correct, for he frequently obtains vastly different results by repeating in his own way experiments made by others as detailed in books.

"Edison can travel along a well-used road and still find virgin soil," remarked recently one of his most practical experimenters, who had been working along a certain line without attaining the desired result. "He wanted to get a particular compound having definite qualities, and I had tried in all sorts of ways to produce it but with only partial success. He was confident that it could be done, and said he would try it himself. In doing so he followed the same path in which I had travelled, but, by making an undreamed-of change in one of the operations, succeeded in producing a compound that virtually came up to his specifications. It is not the only time I have known this sort of thing to happen."

In speaking of Edison's method of experimenting, another of his laboratory staff says: "He is never

hindered by theory, but resorts to actual experiment for proof. For instance, when he conceived the idea of pouring a complete concrete house it was universally held that it would be impossible because the pieces of stone in the mixture would not rise to the level of the pouring-point, but would gravitate to a lower plane in the soft cement. This, however, did not hinder him from making a series of experiments which resulted in an invention that proved conclusively the contrary."

Having conceived some new idea and read everything obtainable relating to the subject in general, Edison's fertility of resource and originality come into play. Taking one of the laboratory note-books, he will write in it a memorandum of the experiments to be tried, illustrated, if necessary, by sketches. This book is then passed on to that member of the experimental staff whose special training and experience are best adapted to the work. Here strenuousness is expected; and an immediate commencement of investigation and prompt report are required. Sometimes the subject may be such as to call for a long line of frequent tests which necessitate patient and accurate attention to minute details. Results must be reported often—daily, or possibly with still greater frequency. Edison does not forget what is going on; but in his daily tours through the laboratory keeps in touch with all the work that is under the hands of his various assistants, showing by an instant grasp of the present conditions of any experiment that he has a full consciousness of its meaning and its reference to his original conception.

The year 1869 saw the beginning of Edison's career as an acknowledged inventor of commercial devices. From the outset, an innate recognition of system dictated the desirability and wisdom of preserving records of his experiments and inventions. The primitive records, covering the earliest years, were mainly jotted down on loose sheets of paper covered with sketches, notes, and data, pasted into large scrap-books, or preserved in packages; but with the passing of years and enlargement of his interests, it became the practice to make all original laboratory notes in large, uniform books. This course was pursued until the Menlo Park period, when he instituted a new régime that has been continued down to the present day. A standard form of note-book, about eight and a half by six inches, containing about two hundred pages, was adopted. A number of these books were (and are now) always to be found scattered around in the different sections of the laboratory, and in them have been noted by Edison all his ideas, sketches, and memoranda. Details of the various experiments concerning them have been set down by his assistants from time to time.

These later laboratory note-books, of which there are now over one thousand in the series, are eloquent in the history they reveal of the strenuous labors of Edison and his assistants and the vast fields of research he has covered during the last thirty years. They are overwhelmingly rich in biographic material, but analysis would be a prohibitive task for one person, and perhaps interesting only to technical readers. Their pages cover practically every department of

science. The countless thousands of separate experiments recorded exhibit the operations of a master mind seeking to surprise Nature into a betrayal of her secrets by asking her the same question in a hundred different ways. For instance, when Edison was investigating a certain problem of importance many years ago, the note-books show that on this point alone about fifteen thousand experiments and tests were made by one of his assistants.

A most casual glance over these note-books will illustrate the following remark, which was made to one of the writers not long ago by a member of the laboratory staff who has been experimenting there for twenty years: "Edison can think of more ways of doing a thing than any man I ever saw or heard of. He tries everything and never lets up, even though failure is apparently staring him in the face. He only stops when he simply can't go any further on that particular line. When he decides on any mode of procedure he gives his notes to the experimenter and lets him alone, only stepping in from time to time to look at the operations and receive reports of progress."

The history of the development of the telephone transmitter, phonograph, incandescent lamp, dynamo, electrical distributing systems from central stations, electric railway, ore-milling, cement, motion pictures, and a host of minor inventions may be found embedded in the laboratory note-books. A passing glance at a few pages of these written records will serve to illustrate, though only to a limited extent, the thoroughness of Edison's method. It is to be

observed that these references can be but of the most meagre kind, and must be regarded as merely throwing a side-light on the subject itself. For instance, the complex problem of a practical telephone transmitter gave rise to a series of most exhaustive experiments. Combinations in almost infinite variety, including gums, chemical compounds, oils, minerals, and metals were suggested by Edison; and his assistants were given long lists of materials to try with reference to predetermined standards of articulation, degrees of loudness, and perfection of hissing sounds. The note-books contain hundreds of pages showing that a great many thousands of experiments were tried and passed upon. Such remarks as "N. G."; "Pretty good"; "Whistling good, but no articulation"; "Rattly"; "Articulation, whispering, and whistling good"; "Best to-night so far"; and others are noted opposite the various combinations as they were tried. Thus, one may follow the investigation through a maze of experiments which led up to the successful invention of the carbon button transmitter, the vital device to give the telephone its needed articulation and perfection.

The two hundred and odd note-books, covering the strenuous period during which Edison was carrying on his electric-light experiments, tell on their forty thousand pages or more a fascinating story of the evolution of a new art in its entirety. From the crude beginnings, through all the varied phases of this evolution, the operations of a master mind are apparent from the contents of these pages, in which are recorded the innumerable experiments, calculations,

and tests that ultimately brought light out of darkness.

The early work on a metallic conductor for lamps gave rise to some very thorough research on melting and alloying metals, the preparation of metallic oxides, the coating of fine wires by immersing them in a great variety of chemical solutions. Following his usual custom, Edison would indicate the lines of experiment to be followed, which were carried out and recorded in the note-books. He himself, in January, 1879, made personally a most minute and searching investigation into the properties and behavior of platino-iridium, boron, rutile, zircon, chromium, molybdenum, and nickel, under varying degrees of current strength, on which there may be found in the notes about forty pages of detailed experiments and deductions in his own handwriting, concluding with the remark (about nickel): "This is a great discovery for electric light in the way of economy."

This period of research on nickel, etc., was evidently a trying one, for after nearly a month's close application he writes, on January 27, 1879: "Owing to the enormous power of the light my eyes commenced to pain after seven hours' work, and I had to quit." On the next day appears the following entry: "Suffered the pains of hell with my eyes last night from 10 P.M. till 4 A.M., when got to sleep with a big dose of morphine. Eyes getting better, and do not pain much at 4 P.M.; but I lose to-day."

The "try everything" spirit of Edison's method is well illustrated in this early period by a series of

about sixteen hundred resistance tests of various ores, minerals, earths, etc., occupying over fifty pages of one of the note-books relating to the metallic filament for his lamps

But, as the reader has already learned, the metallic filament was soon laid aside in favor of carbon, and we find in the laboratory notes an amazing record of research and experiment conducted in the minute and searching manner peculiar to Edison's method. His inquiries were directed along all the various roads leading to the desired goal, for long before he had completed the invention of a practical lamp he realized broadly the fundamental requirements of a successful system of electrical distribution, and had given instructions for the making of a great variety of calculations which, although far in advance of the time, were clearly foreseen by him to be vitally important in the ultimate solution of the complicated problem. Thus we find many hundreds of pages of the note-books covered with computations and calculations by Mr. Upton, not only on the numerous ramifications of the projected system and comparisons with gas, but also on proposed forms of dynamos and the proposed station in New York. A mere recital by titles of the vast number of experiments and tests on carbons, lamps, dynamos, armatures, commutators, windings, systems, regulators, sockets, vacuum-pumps, and the thousand and one details relating to the subject in general, originated by Edison, and methodically and systematically carried on under his general direction, would fill a great many pages here, and even then would serve

only to convey a confused impression of ceaseless probing.

It is possible only to a broad, comprehensive mind well stored with knowledge, and backed with resistless, boundless energy, that such a diversified series of experiments and investigations could be carried on simultaneously and assimilated, even though they should relate to a class of phenomena already understood and well defined. But if we pause to consider that the commercial subdivision of the electric current (which was virtually an invention made to order) involved the solution of problems so unprecedented that even they themselves had to be created, we cannot but conclude that the afflatus of innate genius played an important part in the unique methods of investigation instituted by Edison at that and other times.

The idea of attributing great successes to "genius" has always been repudiated by Edison, as evidenced by his historic remark that "Genius is 1 per cent. inspiration and 99 per cent. perspiration." Again, in a conversation many years ago at the laboratory between Edison, Batchelor, and E. H. Johnson, the latter made allusion to Edison's genius as evidenced by some of his achievements, when Edison replied:

"Stuff! I tell you genius is hard work, stick-to-it-iveness, and common sense."

"Yes," said Johnson, "I admit there is all that to it, but there's still more. Batch and I have those qualifications, but although we knew quite a lot about telephones, and worked hard, we couldn't invent a brand-new non-infringing telephone receiver as you

did when Gouraud cabled for one. Then, how about the subdivision of the electric light?"

"Electric current," corrected Edison.

"True," continued Johnson; "you were the one to make that very distinction. The scientific world had been working hard on subdivision for years, using what appeared to be common sense. Results worse than nil. Then you come along, and about the first thing you do, after looking the ground over, is to start off in the opposite direction, which subsequently proves to be the only possible way to reach the goal. It seems to me that this is pretty close to the dictionary definition of genius."

It is said that Edison replied rather incoherently and changed the topic of conversation.

This innate modesty, however, does not prevent Edison from recognizing and classifying his own methods of investigation. In a conversation with two old associates recently (April, 1909), he remarked: "It has been said of me that my methods are empirical. That is true only so far as chemistry is concerned. Did you ever realize that practically all industrial chemistry is colloidal in its nature? Hard rubber, celluloid, glass, soap, paper, and lots of others, all have to deal with amorphous substances, as to which comparatively little has been really settled. My methods are similar to those followed by Luther Burbank. He plants an acre, and when this is in bloom he inspects it. He has a sharp eye, and can pick out of thousands a single plant that has promise of what he wants. From this he gets the seed, and uses his skill and knowledge in producing from it a

number of new plants which, on development, furnish the means of propagating an improved variety in large quantity. So, when I am after a chemical result that I have in mind, I may make hundreds or thousands of experiments out of which there may be one that promises results in the right direction. This I follow up to its legitimate conclusion, discarding the others, and usually get what I am after. There is no doubt about this being empirical; but when it comes to problems of a mechanical nature, I want to tell you that all I've ever tackled and solved have been done by hard, logical thinking." The intense earnestness and emphasis with which this was said were very impressive to the auditors. This empirical method may perhaps be better illustrated by a specific example. During the latter part of the storage-battery investigations, after the form of positive element had been determined upon, it became necessary to ascertain what definite proportions and what quality of nickel hydrate and nickel flake would give the best results. A series of positive tubes were filled with the two materials in different proportions—say, nine parts hydrate to one of flake; eight parts hydrate to two of flake; seven parts hydrate to three of flake, and so on through varying proportions. Three sets of each of these positives were made, and all put into separate test tubes with a uniform type of negative element. These were carried through a long series of charges and discharges under strict test conditions. From the tabulated results of hundreds of tests there were selected three that showed the best results. These, however, showed only the superiority of cer-

tain *proporuons* of the materials. The next step would be to find out the best *quality*. Now, as there are several hundred variations in the quality of nickel flake, and perhaps a thousand ways to make the hydrate, it will be realized that Edison's methods led to stupendous detail, for these tests embraced a trial of all the qualities of both materials in the three proportions found to be most suitable. Among these many thousands of experiments any that showed extraordinary results were again elaborated by still further series of tests, until Edison was satisfied that he had obtained the best result in that particular line.

The laboratory note-books do not always tell the whole story or meaning of an experiment that may be briefly outlined on one of their pages. For example, the early filament made of a mixture of lampblack and tar is merely a suggestion in the notes, but its making afforded an example of Edison's pertinacity. These materials, when mixed, became a friable mass, which he had found could be brought into such a cohesive, putty-like state by manipulation, as to be capable of being rolled out into filaments as fine as seven-thousandths of an inch in cross-section. One of the laboratory assistants was told to make some of this mixture, knead it, and roll some filaments. After a time he brought the mass to Edison, and said:

"There's something wrong about this, for it crumbles even after manipulating it with my fingers."

"How long did you knead it?" said Edison.

"Oh! more than an hour," replied the assistant.

"Well, just keep on for a few hours more and it will come out all right," was the rejoinder. And this

proved to be correct, for, after a prolonged kneading and rolling, the mass changed into a cohesive, stringy, homogeneous putty. It was from a mixture of this kind that spiral filaments were made and used in some of the earliest forms of successful incandescent lamps; indeed, they are described and illustrated in Edison's fundamental lamp patent (No. 223,898).

The present narrative would assume the proportions of a history of the incandescent lamp, should the authors attempt to follow Edison's investigations through the thousands of pages of note-books away back in the eighties and early nineties. Improvement of the lamp was constantly in his mind all those years, and besides the vast amount of detail experimental work he laid out for his assistants, he carried on a great deal of research personally. Sometimes whole books are filled in his own handwriting with records of experiments showing every conceivable variation of some particular line of inquiry; each trial bearing some terse comment expressive of results. In one book appear the details of one of these experiments on September 3, 1891, at 4.30 A.M., with the comment: "Brought up lamp higher than a 16-c.p. 240 was ever brought before—Hurrah!" Notwithstanding the late hour, he turns over to the next page and goes on to write his deductions from this result as compared with those previously obtained. Proceeding day by day, as appears by this same book, he follows up another line of investigation on lamps, apparently full of difficulty, for after one hundred and thirty-two other recorded experiments we find this note: "Saturday 3.30 went home disgusted with incandescent

lamps." This feeling was evidently evanescent, for on the succeeding Monday the work was continued and carried on by him as keenly as before, as shown by the next batch of notes.

This is the only instance showing any indication of impatience that the authors have found in looking through the enormous mass of laboratory notes. All his assistants agree that Edison is the most patient, tireless experimenter that could be conceived of. Failures do not distress him; indeed, he regards them as always useful, as may be gathered from the following, related by Dr. E. G. Acheson, formerly one of his staff: "I once made an experiment in Edison's laboratory at Menlo Park during the latter part of 1880, and the results were not as looked for. I considered the experiment a perfect failure, and while bemoaning the results of this apparent failure Mr. Edison entered, and, after learning the facts of the case, cheerfully remarked that I should not look upon it as a failure, for he considered every experiment a success, as in all cases it cleared up the atmosphere, and even though it failed to accomplish the results sought for, it should prove a valuable lesson for guidance in future work. I believe that Mr. Edison's success as an experimenter was, to a large extent, due to this happy view of all experiments."

Edison has frequently remarked that out of a hundred experiments he does not expect more than one to be successful, and as to that one he is always suspicious until frequent repetition has verified the original results.

This patient, optimistic view of the outcome of

experiments has remained part of his character down to this day, just as his painstaking, minute, incisive methods are still unchanged. But to the careless, stupid, or lazy person he is a terror for the short time they remain around him. Honest mistakes may be tolerated, but not carelessness, incompetence, or lack of attention to business. In such cases Edison is apt to express himself freely and forcibly, as when he was asked why he had parted with a certain man, he said: "Oh, he was so slow that it would take him half an hour to get out of the field of a microscope." Another instance will be illustrative. Soon after the Brockton (Massachusetts) central station was started in operation many years ago, he wrote a note to Mr. W. S. Andrews, containing suggestions as to future stations, part of which related to the various employees and their duties. After outlining the duties of the meter man, Edison says: "I should not take too young a man for this, say, a man from twenty-three to thirty years old, bright and businesslike. Don't want any one who yearns to enter a laboratory and experiment. We have a bad case of that at Brockton; he neglects business to potter. What we want is a good lamp average and no unprofitable customer. You should have these men on probation and subject to passing an examination by me. This will wake them up."

Edison's examinations are no joke, according to Mr. J. H. Vail, formerly one of the Menlo Park staff. "I wanted a job," he said, "and was ambitious to take charge of the dynamo-room. Mr. Edison led me to a heap of junk in a corner and said: 'Put that to-

gether and let me know when it's running.' I didn't know what it was, but received a liberal education in finding out. It proved to be a dynamo, which I finally succeeded in assembling and running. I got the job." Another man who succeeded in winning a place as assistant was Mr. John F. Ott, who has remained in his employ for over forty years. In 1869, when Edison was occupying his first manufacturing shop (the third floor of a small building in Newark), he wanted a first-class mechanician, and Mr. Ott was sent to him. "He was then an ordinary-looking young fellow," says Mr. Ott, "dirty as any of the other workmen, unkempt, and not much better dressed than a tramp, but I immediately felt that there was a great deal in him." This is the conversation that ensued, led by Mr. Edison's question:

"What do you want?"

"Work."

"Can you make this machine work?" (exhibiting it and explaining its details).

"Yes."

"Are you sure?"

"Well, you needn't pay me if I don't."

And thus Mr. Ott went to work and succeeded in accomplishing the results desired. Two weeks afterward Mr. Edison put him in charge of the shop.

Edison's life fairly teems with instances of unruffled patience in the pursuit of experiments. When he feels thoroughly impressed with the possibility of accomplishing a certain thing, he will settle down composedly to investigate it to the end.

This is well illustrated in a story relating to his

invention of the type of storage battery bearing his name. Mr. W. S. Mallory, one of his closest associates for many years, is the authority for the following: "When Mr. Edison decided to shut down the ore-milling plant at Edison, New Jersey, in which I had been associated with him, it became a problem as to what he could profitably take up next, and we had several discussions about it. He finally thought that a good storage battery was a great requisite, and decided to try and devise a new type, for he declared emphatically he would make no battery requiring sulphuric acid. After a little thought he conceived the nickel-iron idea, and started to work at once with characteristic energy. About 7 or 7.30 A.M. he would go down to the laboratory and experiment, only stopping for a short time at noon to eat a lunch sent down from the house. About 6 o'clock the carriage would call to take him to dinner, from which he would return by 7.30 or 8 o'clock to resume work. The carriage came again at midnight to take him home, but frequently had to wait until 2 or 3 o'clock, and sometimes return without him, as he had decided to continue all night.

"This had been going on more than five months, seven days a week, when I was called down to the laboratory to see him. I found him at a bench about three feet wide and twelve to fifteen feet long, on which there were hundreds of little test cells that had been made up by his corps of chemists and experimenters. He was seated at this bench testing, figuring, and planning. I then learned that he had thus made over nine thousand experiments in trying to devise

this new type of storage battery, but had not produced a single thing that promised to solve the question. In view of this immense amount of thought and labor, my sympathy got the better of my judgment, and I said: 'Isn't it a shame that with the tremendous amount of work you have done you haven't been able to get any results?' Edison turned on me like a flash, and with a smile replied: 'Results! Why, man, I have gotten a lot of results! I know several thousand things that won't work.'

"At that time he sent me out West on a special mission. On my return, a few weeks later, his experiments had run up to over ten thousand, but he had discovered the missing link in the combination sought for. Of course, we all remember how the battery was completed and put on the market. Then, because he was dissatisfied with it, he stopped the sales and commenced a new line of investigation, which has recently culminated successfully. I shouldn't wonder if his experiments on the battery ran up pretty near to fifty thousand, for they fill more than one hundred and fifty of the note-books, to say nothing of some thousands of tests in curve sheets."

Although Edison has an absolute disregard for the total outlay of money in investigation, he is particular to keep down the cost of individual experiments to a minimum, for, as he observed to one of his assistants: "A good many inventors try to develop things life-size, and thus spend all their money, instead of first experimenting more freely on a small scale." To Edison life is not only a grand opportunity to find

out things by experiment, but, when found, to improve them by further experiment. One night, after receiving a satisfactory report of progress from Mr. Mason, superintendent of the cement plant, he said: "The only way to keep ahead of the procession is to experiment. If you don't, the other fellow will. When there's no experimenting there's no progress. Stop experimenting and you go backward. If anything goes wrong, experiment until you get to the very bottom of the trouble."

It is easy to realize, therefore, that a character so thoroughly permeated with these ideas is not apt to stop and figure out expense when in hot pursuit of some desired object. When that object has been attained, however, and it passes from the experimental to the commercial stage, Edison's monetary views again come into strong play, but they take a diametrically opposite position, for he then begins immediately to plan the extreme of economy in the production of the article. A thousand and one instances could be quoted in illustration; but as they would tend to change the form of this narrative into a history of economy in manufacture, it will suffice to mention but one, and that a recent occurrence, which serves to illustrate how closely he keeps in touch with everything, and also how the inventive faculty and instinct of commercial economy run close together. It was during Edison's winter stay in Florida, in March, 1909. He had reports sent to him daily from various places, and studied them carefully, for he would write frequently with comments, instructions, and suggestions; and in one

case, commenting on the oiling system at the cement plant, he wrote: "Your oil losses are now getting lower, I see." Then, after suggesting some changes to reduce them still further, he went on to say: "Here is a chance to save a mill per barrel based on your regular daily output."

This thorough consideration of the smallest detail is essentially characteristic of Edison, not only in economy of manufacture, but in all his work, no matter of what kind, whether it be experimenting, investigating, testing, or engineering. To follow him through the labyrinthine paths of investigation contained in the great array of laboratory note-books is to become involved in a mass of minutely detailed searches which seek to penetrate the inmost recesses of nature by an ultimate analysis of an infinite variety of parts. As the reader will obtain a fuller comprehension of this idea, and of Edison's methods, by concrete illustration rather than by generalization, the authors have thought it well to select at random two typical instances of specific investigations out of the thousands that are scattered through the note-books. These will be found in the following extracts from one of the note-books, and consist of Edison's instructions to be carried out in detail by his experimenters:

"Take, say, 25 lbs. hard Cuban asphalt and separate all the different hydrocarbons, etc., as far as possible by means of solvents. It will be necessary first to dissolve everything out by, say, hot turpentine, then successively treat the residue with bisulphide carbon, benzol, ether, chloroform, naphtha, toluol, alcohol, and other probable

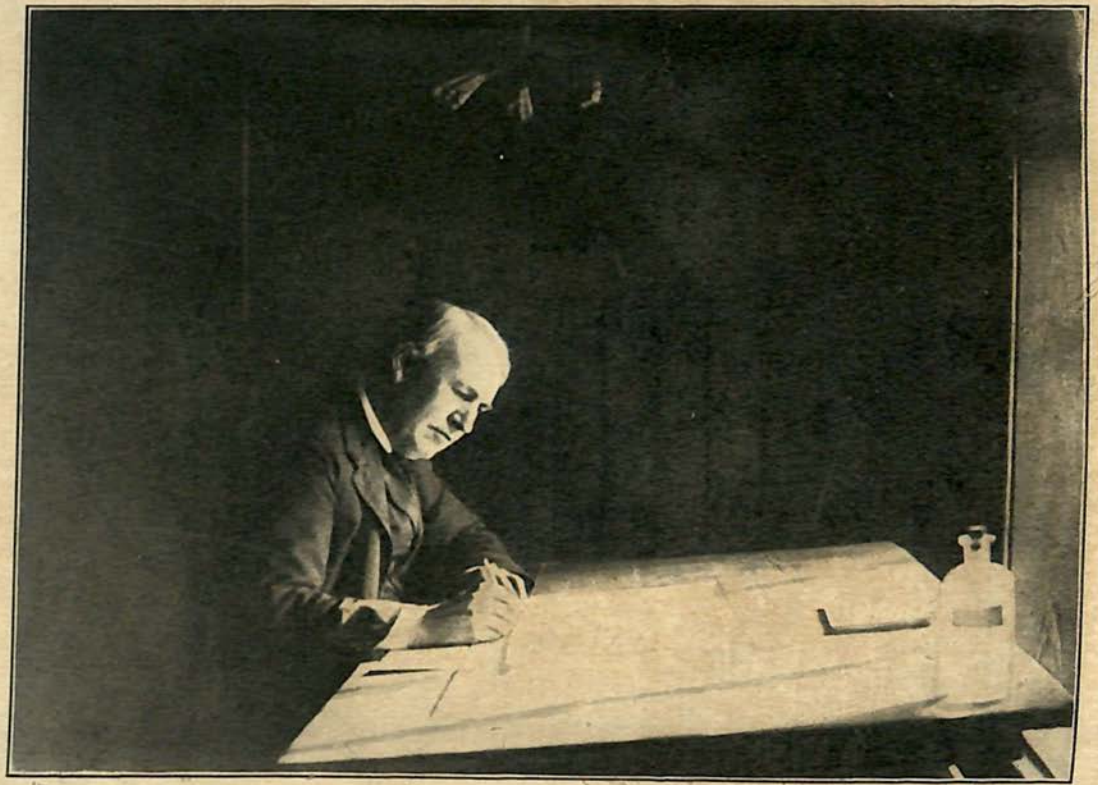

EDISON AT THE DRAUGHTING-BOARD

solvents. After you can go no further, distil off all the solvents so the asphalt material has a tar-like consistency. Be sure all the ash is out of the turpentine portion; now, after distilling the turpentine off, act on the residue with all the solvents that were used on the residue, using for the first the solvent which is least likely to dissolve a great part of it. By thus manipulating the various solvents you will be enabled probably to separate the crude asphalt into several distinct hydrocarbons. Put each in a bottle after it has been dried, and label the bottle with the process, etc., so we may be able to duplicate it; also give bottle a number and describe everything fully in note-book."

"Destructively distil the following substances down to a point just short of carbonization, so that the residuum can be taken out of the retort, powdered, and acted on by all the solvents just as the asphalt in previous page. The distillation should be carried to, say, 600° or 700° Fahr., but not continued long enough to wholly reduce mass to charcoal, but always run to blackness. Separate the residuum in as many definite parts as possible, bottle and label, and keep accurate records as to process, weights, etc., so a reproduction of the experiment can at any time be made: Gelatine, 4 lbs.; asphalt, hard Cuban, 10 lbs.; coal-tar or pitch, 10 lbs.; wood-pitch, 10 lbs.; Syrian asphalt, 10 lbs.; bituminous coal, 10 lbs.; cane-sugar, 10 lbs.; glucose, 10 lbs.; dextrine, 10 lbs.; glycerine, 10 lbs.; tartaric acid, 5 lbs.; gum guiac, 5 lbs.; gum amber, 3 lbs.; gum tragacanth, 3 lbs.; aniline red, 1 lb.; aniline oil, 1 lb.; crude anthracene, 5 lbs.; petroleum pitch, 10 lbs.; albumen from eggs, 2 lbs.; tar from passing chlorine through aniline oil, 2 lbs.; citric acid, 5 lbs.; sawdust of boxwood, 3 lbs.; starch, 5 lbs.; shellac, 3 lbs.; gum Arabic, 5 lbs.; castor oil, 5 lbs."

The empirical nature of his method will be apparent from an examination of the above items; but in pur-

suing it he leaves all uncertainty behind and, trusting nothing to theory, he acquires absolute knowledge. Whatever may be the mental processes by which he arrives at the starting-point of any specific line of research, the final results almost invariably prove that he does not plunge in at random; indeed, as an old associate remarked: "When Edison takes up any proposition in natural science, his perceptions seem to be elementally broad and analytical, that is to say, in addition to the knowledge he has acquired from books and observation, he appears to have an intuitive apprehension of the general order of things, as they might be supposed to exist in natural relation to each other. It has always seemed to me that he goes to the core of things at once."

Although nothing less than results from actual experiments are acceptable to him as established facts, this view of Edison may also account for his peculiar and somewhat weird ability to "guess" correctly, a faculty which has frequently enabled him to take short cuts to lines of investigation whose outcome has verified in a most remarkable degree statements apparently made offhand and without calculation. Mr. Upton says: "One of the main impressions left upon me, after knowing Mr. Edison for many years, is the marvellous accuracy of his guesses. He will see the general nature of a result long before it can be reached by mathematical calculation." This was supplemented by one of his engineering staff, who remarked: "Mr. Edison can guess better than a good many men can figure, and so far as my experience goes, I have found that he is almost invariably

correct. His guess is more than a mere starting-point, and often turns out to be the final solution of a problem. I can only account for it by his remarkable insight and wonderful natural sense of the proportion of things, in addition to which he seems to carry in his head determining factors of all kinds, and has the ability to apply them instantly in considering any mechanical problem."

While this mysterious intuitive power has been of the greatest advantage in connection with the vast number of technical problems that have entered into his life-work, there have been many remarkable instances in which it has seemed little less than prophecy, and it is deemed worth while to digress to the extent of relating two of them. One day in the summer of 1881, when the incandescent lamp-industry was still in swaddling clothes, Edison was seated in the room of Major Eaton, vice-president of the Edison Electric Light Company, talking over business matters, when Mr. Upton came in from the lamp factory at Menlo Park, and said: "Well, Mr. Edison, we completed a thousand lamps to-day." Edison looked up and said "Good," then relapsed into a thoughtful mood. In about two minutes he raised his head, and said: "Upton, in fifteen years you will be making forty thousand lamps a day." None of those present ventured to make any remark on this assertion, although all felt that it was merely a random guess, based on the sanguine dream of an inventor. The business had not then really made a start, and being entirely new was without precedent upon which to base any such statement, but, as a matter of fact, the

records of the lamp factory show that in 1896 its daily output of lamps was actually about forty thousand.

The other instance referred to occurred shortly after the Edison Machine Works was moved up to Schenectady, in 1886. One day, when he was at the works, Edison sat down and wrote on a sheet of paper fifteen separate predictions of the growth and future of the electrical business. Notwithstanding the fact that the industry was then in an immature state, and that the great boom did not set in until a few years afterward, twelve of these predictions have been fully verified by the enormous growth and development in all branches of the art.

What the explanation of this gift, power, or intuition may be, is perhaps better left to the psychologist to speculate upon. If one were to ask Edison, he would probably say, "Hard work, not too much sleep, and free use of the imagination." Whether or not it would be possible for the average mortal to arrive at such perfection of "guessing" by faithfully following this formula, even reinforced by the Edison recipe for stimulating a slow imagination with pastry, is open for demonstration.

Somewhat allied to this curious faculty is another no less remarkable, and that is, the ability to point out instantly an error in a mass of reported experimental results. While many instances could be definitely named, a typical one, related by Mr. J. D. Flack, formerly master mechanic at the lamp factory, may be quoted: "During the many years of lamp experimentation, batches of lamps were sent to the

photometer department for test, and Edison would examine the tabulated test sheets. He ran over every item of the tabulations rapidly, and, apparently without any calculation whatever, would check off errors as fast as he came to them, saying: 'You have made a mistake; try this one over.' In every case the second test proved that he was right. This wonderful aptitude for infallibly locating an error without an instant's hesitation for mental calculation, has always appealed to me very forcibly."

The ability to detect errors quickly in a series of experiments is one of the things that has enabled Edison to accomplish such a vast amount of work as the records show. Examples of the minuteness of detail into which his researches extend have already been mentioned, and as there are always a number of such investigations in progress at the laboratory, this ability stands Edison in good stead, for he is thus enabled to follow, and, if necessary, correct each one step by step. In this he is aided by the great powers of a mind that is able to free itself from absorbed concentration on the details of one problem, and instantly to shift over and become deeply and intelligently concentrated in another and entirely different one. For instance, he may have been busy for hours on chemical experiments, and be called upon suddenly to determine some mechanical questions. The complete and easy transition is the constant wonder of his associates, for there is no confusion of ideas resulting from these quick changes, no hesitation or apparent effort, but a plunge into the midst of the new subject, and an instant acquaint-

ance with all its details, as if he had been studying it for hours.

A good stiff difficulty—one which may, perhaps, appear to be an unsurmountable obstacle—only serves to make Edison cheerful, and brings out variations of his methods in experimenting. Such an occurrence will start him thinking, which soon gives rise to a line of suggestions for approaching the trouble from various sides; or he will sit down and write out a series of eliminations, additions, or changes to be worked out and reported upon, with such variations as may suggest themselves during their progress. It is at such times as these that his unfailing patience and tremendous resourcefulness are in evidence. Ideas and expedients are poured forth in a torrent, and although some of them have temporarily appeared to the staff to be ridiculous or irrelevant, they have frequently turned out to be the ones leading to a correct solution of the trouble.

Edison's inexhaustible resourcefulness and fertility of ideas have contributed largely to his great success, and have ever been a cause of amazement to those around him. Frequently, when it would seem to others that the extreme end of an apparently blind alley had been reached, and that it was impossible to proceed further, he has shown that there were several ways out of it. Examples without number could be quoted, but one must suffice by way of illustration. During the progress of the ore-milling work at Edison, it became desirable to carry on a certain operation by some special machinery. He requested the proper person on his engineering staff

to think this matter up and submit a few sketches of what he would propose to do. He brought three drawings to Edison, who examined them and said none of them would answer. The engineer remarked that it was too bad, for there was no other way to do it. Mr. Edison turned to him quickly, and said: "Do you mean to say that these drawings represent the only way to do this work?" To which he received the reply: "I certainly do." Edison said nothing. This happened on a Saturday. He followed his usual custom of spending Sunday at home in Orange. When he returned to the works on Monday morning, he took with him sketches he had made, showing *forty-eight* other ways of accomplishing the desired operation, and laid them on the engineer's desk without a word. Subsequently one of these ideas, with modifications suggested by some of the others, was put into successful practice.

Difficulties seem to have a peculiar charm for Edison, whether they relate to large or small things; and although the larger matters have contributed most to the history of the arts, the same carefulness of thought has often been the means of leading to improvements of permanent advantage even in minor details. For instance, in the very earliest days of electric lighting, the safe insulation of two bare wires fastened together was a serious problem that was solved by him. An iron pot over a fire, some insulating material melted therein, and narrow strips of linen drawn through it by means of a wooden clamp, furnished a readily applied and adhesive insulation, which was just as perfect for the purpose

as the regular and now well-known insulating tape, of which it was the forerunner.

Dubious results are not tolerated for a moment in Edison's experimental work. Rather than pass upon an uncertainty, the experiment will be dissected and checked minutely in order to obtain absolute knowledge, pro and con. This searching method is followed not only in chemical or other investigations, into which complexities might naturally enter, but also in more mechanical questions, where simplicity of construction might naturally seem to preclude possibilities of uncertainty. For instance, at the time when he was making strenuous endeavors to obtain copper wire of high conductivity, strict laboratory tests were made of samples sent by manufacturers. One of these samples tested out poorer than a previous lot furnished from the same factory. A report of this to Edison brought the following note: "Perhaps the —— wire had a bad spot in it. Please cut it up into lengths and test each one and send results to me immediately." Possibly the electrical fraternity does not realize that this earnest work of Edison, twenty-eight years ago, resulted in the establishment of the high quality of copper wire that has been the recognized standard since that time. Says Edison on this point: "I furnished the expert and apparatus to the Ansonia Brass and Copper Company in 1883, and he is there yet. It was this expert and this company who pioneered high-conductivity copper for the electrical trade."

Nor is it generally appreciated in the industry that the adoption of what is now regarded as a most ob-

vious proposition—the high-economy incandescent lamp—was the result of that characteristic foresight which there has been occasion to mention frequently in the course of this narrative, together with the courage and "horse-sense" which have always been displayed by the inventor in his persistent pushing out with far-reaching ideas, in the face of pessimistic opinions. As is well known, the lamps of the first ten or twelve years of incandescent lighting were of low economy, but had long life. Edison's study of the subject had led him to the conviction that the greatest growth of the electric-lighting industry would be favored by a lamp taking less current, but having shorter, though commercially economical life; and after gradually making improvements along this line he developed, finally, a type of high-economy lamp which would introduce a most radical change in existing conditions, and lead ultimately to highly advantageous results. His start on this lamp, and an expressed desire to have it manufactured for regular use, filled even some of his business associates with dismay, for they could see nothing but disaster ahead in forcing such a lamp on the market. His persistence and profound conviction of the ultimate results were so strong and his arguments so sound, however, that the campaign was entered upon. Although it took two or three years to convince the public of the correctness of his views, the idea gradually took strong root, and has now become an integral principle of the business.

In this connection it may be noted that with remarkable prescience Edison saw the coming of the

modern lamps of to-day, which, by reason of their small consumption of energy to produce a given candle-power, have dismayed central-station managers. A few years ago a consumption of 3.1 watts per candle-power might safely be assumed as an excellent average, and many stations fixed their rates and business on such a basis. The results on income when the consumption, as in the new metallic-filament lamps, drops to 1.25 watts per candle can readily be imagined. Edison has insisted that central stations are selling light and not current; and he points to the predicament now confronting them as truth of his assertion that when selling light they share in all the benefits of improvement, but that when they sell current the consumer gets all those benefits without division. The dilemma is encountered by central stations in a bewildered way, as a novel and unexpected experience; but Edison foresaw the situation and warned against it long ago. It is one of the greatest gifts of statesmanship to see new social problems years before they arise and solve them in advance. It is one of the greatest attributes of invention to foresee and meet its own problems in exactly the same way.

CHAPTER XXV

THE LABORATORY AT ORANGE AND THE STAFF

A LIVING interrogation-point and a born investigator from childhood, Edison has never been without a laboratory of some kind for upward of half a century.

In youthful years, as already described in this book, be became ardently interested in chemistry, and even at the early age of twelve felt the necessity for a special nook of his own, where he could satisfy his unconvinced mind of the correctness or inaccuracy of statements and experiments contained in the few technical books then at his command.

Ordinarily he was like other normal lads of his age —full of boyish, hearty enjoyments—but withal possessed of an unquenchable spirit of inquiry and an insatiable desire for knowledge. Being blessed with a wise and discerning mother, his aspirations were encouraged; and he was allowed a corner in her cellar. It is fair to offer tribute here to her bravery as well as to her wisdom, for at times she was in mortal terror lest the precocious experimenter below should, in his inexperience, make some awful combination that would explode and bring down the house in ruins on himself and the rest of the family.

Fortunately no such catastrophe happened, but

young Edison worked away in his embryonic laboratory, satisfying his soul and incidentally depleting his limited pocket-money to the vanishing-point. It was, indeed, owing to this latter circumstance that in a year or two his aspirations necessitated an increase of revenue; and a consequent determination to earn some money for himself led to his first real commercial enterprise as "candy butcher" on the Grand Trunk Railroad, already mentioned in a previous chapter. It has also been related how his precious laboratory was transferred to the train; how he and it were subsequently expelled; and how it was re-established in his home, where he continued studies and experiments until the beginning of his career as a telegraph operator.

The nomadic life of the next few years did not lessen his devotion to study; but it stood seriously in the way of satisfying the ever-present craving for a laboratory. The lack of such a place never prevented experimentation, however, as long as he had a dollar in his pocket and some available "hole in the wall." With the turning of the tide of fortune that suddenly carried him, in New York in 1869, from poverty to the opulence of $300 a month, he drew nearer to a realization of his cherished ambition in having money, place, and some time (stolen from sleep) for more serious experimenting. Thus matters continued until, at about the age of twenty-two, Edison's inventions had brought him a relatively large sum of money, and he became a very busy manufacturer, and lessee of a large shop in Newark, New Jersey.

Now, for the first time since leaving that boyish laboratory in the old home at Port Huron, Edison had a place of his own to work in, to think in; but no one in any way acquainted with Newark as a swarming centre of miscellaneous and multitudinous industries would recommend it as a cloistered retreat for brooding reverie and introspection, favorable to creative effort. Some people revel in surroundings of hustle and bustle, and find therein no hindrance to great accomplishment. The electrical genius of Newark is Edward Weston, who has thriven amid its turmoil and there has developed his beautiful instruments of precision; just as Brush worked out his arc-lighting system in Cleveland; or even as Faraday, surrounded by the din and roar of London, laid the intellectual foundations of the whole modern science of dynamic electricity. But Edison, though deaf, could not make too hurried a retreat from Newark to Menlo Park, where, as if to justify his change of base, vital inventions soon came thick and fast, year after year. The story of Menlo has been told in another chapter, but the point was not emphasized that Edison then, as later, tried hard to drop manufacturing. He would infinitely rather be philosopher than producer; but somehow the necessity of manufacturing is constantly thrust back upon him by a profound—perhaps finical—sense of dissatisfaction with what other people make for him. The world never saw a man more deeply and desperately convinced that nothing in it approaches perfection. Edison is the doctrine of evolution incarnate, applied to mechanics. As to the removal from Newark, he may

be allowed to tell his own story: "I had a shop at Newark in which I manufactured stock tickers and such things. When I moved to Menlo Park I took out only the machinery that would be necessary for experimental purposes and left the manufacturing machinery in the place. It consisted of many milling machines and other tools for duplicating. I rented this to a man who had formerly been my bookkeeper, and who thought he could make money out of manufacturing. There was about $10,000 worth of machinery. He was to pay me $2000 a year for the rent of the machinery and keep it in good order. After I moved to Menlo Park, I was very busy with the telephone and phonograph, and I paid no attention to this little arrangement. About three years afterward, it occurred to me that I had not heard at all from the man who had rented this machinery, so I thought I would go over to Newark and see how things were going. When I got there, I found that instead of being a machine shop it was a hotel! I have since been utterly unable to find out what became of the man or the machinery." Such incidents tend to justify Edison in his rather cynical remark that he has always been able to improve machinery much quicker than men. All the way up he has had discouraging experiences. "One day while I was carrying on my work in Newark, a Wall Street broker came from the city and said he was tired of the 'Street,' and wanted to go into something real. He said he had plenty of money. He wanted some kind of a job to keep his mind off Wall Street. So we gave him a job as a 'mucker' in chemical experiments.

The second night he was there he could not stand the long hours and fell asleep on a sofa. One of the boys took a bottle of bromine and opened it under the sofa. It floated up and produced a violent effect on the mucous membrane. The broker was taken with such a fit of coughing he burst a blood-vessel, and the man who let the bromine out got away and never came back. I suppose he thought there was going to be a death. But the broker lived, and left the next day; and I have never seen him since, either." Edison tells also of another foolhardy laboratory trick of the same kind: "Some of my assistants in those days were very green in the business, as I did not care whether they had had any experience or not. I generally tried to turn them loose. One day I got a new man, and told him to conduct a certain experiment. He got a quart of ether and started to boil it over a naked flame. Of course it caught fire. The flame was about four feet in diameter and eleven feet high. We had to call out the fire department; and they came down and put a stream through the window. That let all the fumes and chemicals out and overcame the firemen; and there was the devil to pay. Another time we experimented with a tub full of soapy water, and put hydrogen into it to make large bubbles. One of the boys, who was washing bottles in the place, had read in some book that hydrogen was explosive, so he proceeded to blow the tub up. There was about four inches of soap in the bottom of the tub, fourteen inches high; and he filled it with soap-bubbles up to the brim. Then he took a bamboo fish-pole, put a piece of paper at the end, and

touched it off. It blew every window out of the place."

Always a shrewd, observant, and kindly critic of character, Edison tells many anecdotes of the men who gathered around him in various capacities at that quiet corner of New Jersey—Menlo Park—and later at Orange, in the Llewellyn Park laboratory; and these serve to supplement the main narrative by throwing vivid side-lights on the whole scene. Here, for example, is a picture drawn by Edison of a laboratory interlude—just a bit Rabelaisian: "When experimenting at Menlo Park we had all the way from forty to fifty men. They worked all the time. Each man was allowed from four to six hours' sleep. We had a man who kept tally, and when the time came for one to sleep, he was notified. At midnight we had lunch brought in and served at a long table at which the experimenters sat down. I also had an organ which I procured from Hilbourne Roosevelt—uncle of the ex-President—and we had a man play this organ while we ate our lunch. During the summer-time, after we had made something which was successful, I used to engage a brick-sloop at Perth Amboy and take the whole crowd down to the fishing-banks on the Atlantic for two days. On one occasion we got outside Sandy Hook on the banks and anchored. A breeze came up, the sea became rough, and a large number of the men were sick. There was straw in the bottom of the boat, which we all slept on. Most of the men adjourned to this straw very sick. Those who were not got a piece of rancid salt pork from the skipper, and cut a large, thick slice

out of it. This was put on the end of a fish-hook and drawn across the men's faces. The smell was terrific, and the effect added to the hilarity of the excursion.

"I went down once with my father and two assistants for a little fishing inside Sandy Hook. For some reason or other the fishing was very poor. We anchored, and I started in to fish. After fishing for several hours there was not a single bite. The others wanted to pull up anchor, but I fished two days and two nights without a bite, until they pulled up anchor and went away. I would not give up. I was going to catch that fish if it took a week."

This is general. Let us quote one or two piquant personal observations of a more specific nature as to the odd characters Edison drew around him in his experimenting. "Down at Menlo Park a man came in one day and wanted a job. He was a sailor. I hadn't any particular work to give him, but I had a number of small induction coils, and to give him something to do I told him to fix them up and sell them among his sailor friends. They were fixed up, and he went over to New York and sold them all. He was an extraordinary fellow. His name was Adams. One day I asked him how long it was since he had been to sea, and he replied two or three years. I asked him how he had made a living in the mean time, before he came to Menlo Park. He said he made a pretty good living by going around to different clinics and getting $10 at each clinic, because of having the worst case of heart-disease on record. I told him if that was the case he would have to be very

careful around the laboratory. I had him there to help in experimenting, and the heart-disease did not seem to bother him at all.

"It appeared that he had once been a slaver; and altogether he was a tough character. Having no other man I could spare at that time, I sent him over with my carbon transmitter telephone to exhibit it in England. It was exhibited before the Post-Office authorities. Professor Hughes spent an afternoon in examining the apparatus, and in about a month came out with his microphone, which was absolutely nothing more nor less than my exact invention. But no mention was made of the fact that, just previously, he had seen the whole of my apparatus. Adams stayed over in Europe connected with the telephone for several years, and finally died of too much whiskey —but not of heart-disease. This shows how whiskey is the more dangerous of the two.

"Adams said that at one time he was aboard a coffee-ship in the harbor of Santos, Brazil. He fell down a hatchway and broke his arm. They took him up to the hospital—a Portuguese one—where he could not speak the language, and they did not understand English. They treated him for two weeks for yellow fever! He was certainly the most profane man we ever had around the laboratory. He stood high in his class."

And there were others of a different stripe. "We had a man with us at Menlo called Segredor. He was a queer kind of fellow. The men got in the habit of plaguing him; and, finally, one day he said to the assembled experimenters in the top room of the

laboratory: 'The next man that does it, I will kill him.' They paid no attention to this, and next day one of them made some sarcastic remark to him. Segredor made a start for his boarding-house, and when they saw him coming back up the hill with a gun, they knew there would be trouble, so they all made for the woods. One of the men went back and mollified him. He returned to his work; but he was not teased any more. At last, when I sent men out hunting for bamboo, I dispatched Segredor to Cuba. He arrived in Havana on Tuesday, and on the Friday following he was buried, having died of the black vomit. On the receipt of the news of his death, half a dozen of the men wanted his job, but my searcher in the Astor Library reported that the chances of finding the right kind of bamboo for lamps in Cuba were very small; so I did not send a substitute."

Another thumb-nail sketch made of one of his associates is this: "When experimenting with vacuum-pumps to exhaust the incandescent lamps, I required some very delicate and close manipulation of glass, and hired a German glass-blower who was said to be the most expert man of his kind in the United States. He was the only one who could make clinical thermometers. He was the most extraordinarily conceited man I have ever come across. His conceit was so enormous, life was made a burden to him by all the boys around the laboratory. He once said that he was educated in a university where all the students belonged to families of the aristocracy; and the highest class in the university all wore little red caps. He said *he* wore one."

Of somewhat different caliber was "honest" John Kruesi, who first made his mark at Menlo Park, and of whom Edison says: "One of the workmen I had at Menlo Park was John Kruesi, who afterward became, from his experience, engineer of the lighting station, and subsequently engineer of the Edison General Electric Works at Schenectady. Kruesi was very exact in his expressions. At the time we were promoting and putting up electric-light stations in Pennsylvania, New York, and New England, there would be delegations of different people who proposed to pay for these stations. They would come to our office in New York, at '65,' to talk over the specifications, the cost, and other things. At first, Mr. Kruesi was brought in, but whenever a statement was made which he could not understand or did not believe could be substantiated, he would blurt right out among these prospects that he didn't believe it. Finally it disturbed these committees so much, and raised so many doubts in their minds, that one of my chief associates said: 'Here, Kruesi, we don't want you to come to these meetings any longer. You are too painfully honest.' I said to him: 'We always tell the truth. It may be deferred truth, but it is the truth.' He could not understand that."

Various reasons conspired to cause the departure from Menlo Park midway in the eighties. For Edison, in spite of the achievement with which its name will forever be connected, it had lost all its attractions and all its possibilities. It had been outgrown in many ways, and strange as the remark may seem, it was not until he had left it behind and had settled

in Orange, New Jersey, that he can be said to have given definite shape to his life. He was only forty in 1887, and all that he had done up to that time, tremendous as much of it was, had worn a haphazard, Bohemian air, with all the inconsequential freedom and crudeness somehow attaching to pioneer life. The development of the new laboratory in West Orange, just at the foot of Llewellyn Park, on the Orange Mountains, not only marked the happy beginning of a period of perfect domestic and family life, but saw in the planning and equipment of a model laboratory plant the consummation of youthful dreams, and of the keen desire to enjoy resources adequate at any moment to whatever strain the fierce fervor of research might put upon them. Curiously enough, while hitherto Edison had sought to dissociate his experimenting from his manufacturing, here he determined to develop a large industry to which a thoroughly practical laboratory would be a central feature, and ever a source of suggestion and inspiration. Edison's standpoint to-day is that an evil to be dreaded in manufacture is that of over-standardization, and that as soon as an article is perfect that is the time to begin improving it. But he who would improve must experiment.

The Orange laboratory, as originally planned, consisted of a main building two hundred and fifty feet long and three stories in height, together with four other structures, each one hundred by twenty-five feet, and only one story in height. All these were substantially built of brick. The main building was divided into five chief divisions—the library, office,

machine shops, experimental and chemical rooms, and stock-room. The use of the smaller buildings will be presently indicated.

Surrounding the whole was erected a high picket fence with a gate placed on Valley Road. At this point a gate-house was provided and put in charge of a keeper, for then, as at the present time, Edison was greatly sought after; and, in order to accomplish any work at all, he was obliged to deny himself to all but the most important callers. The keeper of the gate was usually chosen with reference to his capacity for stony-hearted implacability and adherence to instructions; and this choice was admirably made in one instance when a new gateman, not yet thoroughly initiated, refused admittance to Edison himself. It was of no use to try and explain. To the gateman *every one* was *persona non grata* without proper credentials, and Edison had to wait outside until he could get some one to identify him.

On entering the main building the first doorway from the ample passage leads the visitor into a handsome library finished throughout in yellow pine, occupying the entire width of the building, and almost as broad as long. The centre of this spacious room is an open rectangular space about forty by twenty-five feet, rising clear about forty feet from the main floor to a panelled ceiling. Around the sides of the room, bounding this open space, run two tiers of gallery, divided, as is the main floor beneath them, into alcoves of liberal dimensions. These alcoves are formed by racks extending from floor to ceiling, fitted with shelves, except on two sides of both

galleries, where they are formed by a series of glass-fronted cabinets containing extensive collections of curious and beautiful mineralogical and geological specimens, among which is the notable Tiffany-Kunz collection of minerals acquired by Edison some years ago. Here and there in these cabinets may also be found a few models which he has used at times in his studies of anatomy and physiology.

The shelves on the remainder of the upper gallery and part of those on the first gallery are filled with countless thousands of specimens of ores and minerals of every conceivable kind gathered from all parts of the world, and all tagged and numbered. The remaining shelves of the first gallery are filled with current numbers (and some back numbers) of the numerous periodicals to which Edison subscribes. Here may be found the popular magazines, together with those of a technical nature relating to electricity, chemistry, engineering, mechanics, building, cement, building materials, drugs, water and gas, power, automobiles, railroads, aeronautics, philosophy, hygiene, physics, telegraphy, mining, metallurgy, metals, music, and others; also theatrical weeklies, as well as the proceedings and transactions of various learned and technical societies.

The first impression received as one enters on the main floor of the library and looks around is that of noble proportions and symmetry as a whole. The open central space of liberal dimensions and height, flanked by the galleries and relieved by four handsome electric-lighting fixtures suspended from the ceiling by long chains, conveys an idea of lofty

spaciousness; while the huge open fireplace, surmounted by a great clock built into the wall, at one end of the room, the large rugs, the arm-chairs scattered around, the tables and chairs in the alcoves, give a general air of comfort combined with utility. In one of the larger alcoves, at the sunny end of the main hall, is Edison's own desk, where he may usually be seen for a while in the early morning hours looking over his mail or otherwise busily working on matters requiring his attention.

At the opposite end of the room, not far from the open fireplace, is a long table surrounded by swivel desk-chairs. It is here that directors' meetings are sometimes held, and also where weighty matters are often discussed by Edison at conference with his closer associates. It has been the privilege of the writers to be present at some of these conferences, not only as participants, but in some cases as lookers-on while awaiting their turn. On such occasions an interesting opportunity is offered to study Edison in his intense and constructive moods. Apparently oblivious to everything else, he will listen with concentrated mind and close attention, and then pour forth a perfect torrent of ideas and plans, and, if the occasion calls for it, will turn around to the table, seize a writing-pad and make sketch after sketch with lightning-like rapidity, tearing off each sheet as filled and tossing it aside to the floor. It is an ordinary indication that there has been an interesting meeting when the caretaker about fills a waste-basket with these discarded sketches.

Directly opposite the main door is a beautiful

marble statue purchased by Edison at the Paris Exposition in 1889, on the occasion of his visit there. The statue, mounted on a base three feet high, is an allegorical representation of the supremacy of electric light over all other forms of illumination, carried out by the life-size figure of a youth with half-spread wings seated upon the ruins of a street gas-lamp, holding triumphantly high above his head an electric incandescent lamp. Grouped about his feet are a gear-wheel, voltaic pile, telegraph key, and telephone. This work of art was executed by A. Bordiga, of Rome, held a prominent place in the department devoted to Italian art at the Paris Exposition, and naturally appealed to Edison as soon as he saw it.

In the middle distance, between the entrance door and this statue, has long stood a magnificent palm, but at the present writing it has been set aside to give place to a fine model of the first type of the Edison poured cement house, which stands in a miniature artificial lawn upon a special table prepared for it; while on the floor at the foot of the table are specimens of the full-size molds in which the house will be cast.

The balustrades of the galleries and all other available places are filled with portraits of great scientists and men of achievement, as well as with pictures of historic and scientific interest. Over the fireplace hangs a large photograph showing the Edison cement plant in its entire length, flanked on one end of the mantel by a bust of Humboldt, and on the other by a statuette of Sandow, the latter having been presented to Edison by the celebrated athlete after the visit he made to

Orange to pose for the motion pictures in the earliest days of their development. On looking up under the second gallery at this end is seen a great roll resting in sockets placed on each side of the room. This is a huge screen or curtain which may be drawn down to the floor to provide a means of projection for lantern slides or motion pictures, for the entertainment or instruction of Edison and his guests. In one of the larger alcoves is a large terrestrial globe pivoted in its special stand, together with a relief map of the United States; and here and there are handsomely mounted specimens of underground conductors and electric welds that were made at the Edison Machine Works at Schenectady before it was merged into the General Electric Company. On two pedestals stand, respectively, two other mementoes of the works, one a fifteen-light dynamo of the Edison type, and the other an elaborate electric fan—both of them gifts from associates or employees.

In noting these various objects of interest one must not lose sight of the fact that this part of the building is primarily a library, if indeed that fact did not at once impress itself by a glance at the well-filled unglazed book-shelves in the alcoves of the main floor. Here Edison's catholic taste in reading becomes apparent as one scans the titles of thousands of volumes ranged upon the shelves, for they include astronomy, botany, chemistry, dynamics, electricity, engineering, forestry, geology, geography, mechanics, mining, medicine, metallurgy, magnetism, philosophy, psychology, physics, steam, steam-engines, telegraphy, telephony, and many

others. Besides these there are the journals and proceedings of numerous technical societies; encyclopædias of various kinds; bound series of important technical magazines; a collection of United States and foreign patents, embracing some hundreds of volumes, together with an extensive assortment of miscellaneous books of special and general interest. There is another big library up in the house on the hill—in fact, there are books upon books all over the home. And wherever they are, those books are read.

As one is about to pass out of the library attention is arrested by an incongruity in the form of a cot, which stands in an alcove near the door. Here Edison, throwing himself down, sometimes seeks a short rest during specially long working hours. Sleep is practically instantaneous and profound, and he awakes in immediate and full possession of his faculties, arising from the cot and going directly "back to the job" without a moment's hesitation, just as a person wide awake would arise from a chair and proceed to attend to something previously determined upon.

Immediately outside the library is the famous stock-room, about which much has been written and invented. Its fame arose from the fact that Edison planned it to be a repository of some quantity, great or small, of every known and possibly useful substance not readily perishable, together with the most complete assortment of chemicals and drugs that experience and knowledge could suggest. Always strenuous in his experimentation, and the living embodiment of the spirit of the song, *I Want What I Want* When *I Want It*, Edison had known for years

what it was to be obliged to wait, and sometimes lack, for some substance or chemical that he thought necessary to the success of an experiment. Naturally impatient at any delay which interposed in his insistent and searching methods, and realizing the necessity of maintaining the inspiration attending his work at any time, he determined to have within his immediate reach the natural resources of the world.

Hence it is not surprising to find the stock-room not only a museum, but a sample-room of nature, as well as a supply department. To a casual visitor the first view of this heterogeneous collection is quite bewildering, but on more mature examination it resolves itself into a natural classification—as, for instance, objects pertaining to various animals, birds, and fishes, such as skins, hides, hair, fur, feathers, wool, quills, down, bristles, teeth, bones, hoofs, horns, tusks, shells; natural products, such as woods, barks, roots, leaves, nuts, seeds, herbs, gums, grains, flours, meals, bran; also minerals in great assortment; mineral and vegetable oils, clay, mica, ozokerite, etc. In the line of textiles, cotton and silk threads in great variety, with woven goods of all kinds from cheese-cloth to silk plush. As for paper, there is everything in white and colored, from thinnest tissue up to the heaviest asbestos, even a few newspapers being always on hand. Twines of all sizes, inks, waxes, cork, tar, resin, pitch, turpentine, asphalt, plumbago, glass in sheets and tubes; and a host of miscellaneous articles revealed on looking around the shelves, as well as an interminable col-

lection of chemicals, including acids, alkalies, salts, reagents, every conceivable essential oil and all the thinkable extracts. It may be remarked that this collection includes the eighteen hundred or more fluorescent salts made by Edison during his experimental search for the best material for a fluoroscope in the initial X-ray period. All known metals in form of sheet, rod and tube, and of great variety in thickness, are here found also, together with a most complete assortment of tools and accessories for machine shop and laboratory work.

The list is confined to the merest general mention of the scope of this remarkable and interesting collection, as specific details would stretch out into a catalogue of no small proportions. When it is stated, however, that a stock clerk is kept exceedingly busy all day answering the numerous and various demands upon him, the reader will appreciate that this comprehensive assortment is not merely a fad of Edison's, but stands rather as a substantial tribute to his wide-angled view of possible requirements as his various investigations take him far afield. It has no counterpart in the world!

Beyond the stock-room, and occupying about half the building on the same floor, lie a machine shop, engine-room, and boiler-room. This machine shop is well equipped, and in it is constantly employed a large force of mechanics whose time is occupied in constructing the heavier class of models and mechanical devices called for by the varied experiments and inventions always going on.

Immediately above, on the second floor, is found

another machine shop in which is maintained a corps of expert mechanics who are called upon to do work of greater precision and fineness, in the construction of tools and experimental models. This is the realm presided over lovingly by John F. Ott, who has been Edison's designer of mechanical devices for over forty years. He still continues to ply his craft with unabated skill and oversees the work of the mechanics as his productions are wrought into concrete shape.

In one of the many experimental-rooms lining the sides of the second floor may usually be seen his younger brother, Fred Ott, whose skill as a dexterous manipulator and ingenious mechanic has found ample scope for exercise during the thirty-two years of his service with Edison, not only at the regular laboratories, but also at that connected with the inventor's winter home in Florida. Still another of the Ott family, the son of John F., for some years past has been on the experimental staff of the Orange laboratory. Although possessing in no small degree the mechanical and manipulative skill of the family, he has chosen chemistry as his special domain, and may be found with the other chemists in one of the chemical-rooms.

On this same floor is the vacuum-pump room with a glass-blowers' room adjoining, both of them historic by reason of the strenuous work done on incandescent lamps and X-ray tubes within their walls. The tools and appliances are kept intact, for Edison calls occasionally for their use in some of his later experiments, and there is a suspicion among the laboratory staff that some day he may resume work

on incandescent lamps. Adjacent to these rooms are several others devoted to physical and mechanical experiments, together with a draughting-room.

Last to be mentioned, but the first in order as one leaves the head of the stairs leading up to this floor, is No. 12, Edison's favorite room, where he will frequently be found. Plain of aspect, being merely a space boarded off with tongued-and-grooved planks—as all the other rooms are—without ornament or floor covering, and containing only a few articles of cheap furniture, this room seems to exercise a nameless charm for him. The door is always open, and often he can be seen seated at a plain table in the centre of the room, deeply intent on some of the numerous problems in which he is interested. The table is usually pretty well filled with specimens or data of experimental results which have been put there for his examination. At the time of this writing these specimens consist largely of sections of positive elements of the storage battery, together with many samples of nickel hydrate, to which Edison devotes deep study. Close at hand is a microscope which is in frequent use by him in these investigations. Around the room, on shelves, are hundreds of bottles each containing a small quantity of nickel hydrate made in as many different ways, each labelled correspondingly. Always at hand will be found one or two of the laboratory note-books, with frequent entries or comments in the handwriting which once seen is never forgotten.

No. 12 is at times a chemical, a physical, or a mechanical room—occasionally a combination of all,

while sometimes it might be called a consultation-room or clinic—for often Edison may be seen there in animated conference with a group of his assistants; but its chief distinction lies in its being one of his favorite haunts, and in the fact that within its walls have been settled many of the perplexing problems and momentous questions that have brought about great changes in electrical and engineering arts during the twenty-odd years that have elapsed since the Orange laboratory was built.

Passing now to the top floor the visitor finds himself at the head of a broad hall running almost the entire length of the building, and lined mostly with glass-fronted cabinets containing a multitude of experimental incandescent lamps and an immense variety of models of phonographs, motors, telegraph and telephone apparatus, meters, and a host of other inventions upon which Edison's energies have at one time and another been bent. Here also are other cabinets containing old papers and records, while further along the wall are piled up boxes of historical models and instruments. In fact, this hallway, with its conglomerate contents, may well be considered a scientific attic. It is to be hoped that at no distant day these Edisoniana will be assembled and arranged in a fireproof museum for the benefit of posterity.

In the front end of the building, and extending over the library, is a large room intended originally and used for a time as the phonograph music-hall for record-making, but now used only as an experimental-room for phonograph work, as the growth of the industry has necessitated a very much larger and

more central place where records can be made on a commercial scale. Even the experimental work imposes no slight burden on it. On each side of the hallway above mentioned, rooms are partitioned off and used for experimental work of various kinds, mostly phonographic, although on this floor are also located the storage-battery testing-room, a chemical and physical room and Edison's private office, where all his personal correspondence and business affairs are conducted by his personal secretary, Mr. H. F. Miller. A visitor to this upper floor of the laboratory building cannot but be impressed with a consciousness of the incessant efforts that are being made to improve the reproducing qualities of the phonograph, as he hears from all sides the sounds of vocal and instrumental music constantly varying in volume and timbre, due to changes in the experimental devices under trial.

The traditions of the laboratory include cots placed in many of the rooms of these upper floors, but that was in the earlier years when the strenuous scenes of Menlo Park were repeated in the new quarters. Edison and his closest associates were accustomed to carry their labors far into the wee sma' hours, and when physical nature demanded a respite from work, a short rest would be obtained by going to bed on a cot. One would naturally think that the wear and tear of this intense application, day after day and night after night, would have tended to induce a heaviness and gravity of demeanor in these busy men; but on the contrary, the old spirit of good-humor and prankishness was ever present, as its fre-

quent outbursts manifested from time to time. One instance will serve as an illustration. One morning, about 2.30, the late Charles Batchelor announced that he was tired and would go to bed. Leaving Edison and the others busily working, he went out and returned quietly in slippered feet, with his nightgown on, the handle of a feather duster stuck down his back with the feathers waving over his head, and his face marked. With unearthly howls and shrieks, *à l'Indien*, he pranced about the room, incidentally giving Edison a scare that made him jump up from his work. He saw the joke quickly, however, and joined in the general merriment caused by this prank.

Leaving the main building with its corps of busy experimenters, and coming out into the spacious yard, one notes the four long single-story brick structures mentioned above. The one nearest the Valley Road is called the galvanometer-room, and was originally intended by Edison to be used for the most delicate and minute electrical measurements. In order to provide rigid resting-places for the numerous and elaborate instruments he had purchased for this purpose, the building was equipped along three-quarters of its length with solid pillars, or tables, of brick set deep in the earth. These were built up to a height of about two and a half feet, and each was surmounted with a single heavy slab of black marble. A cement floor was laid, and every precaution was taken to render the building free from all magnetic influences, so that it would be suitable for electrical work of the utmost accuracy and precision. Hence, iron and steel were entirely eliminated in its con-

struction, copper being used for fixtures for steam and water piping, and, indeed, for all other purposes where metal was employed.

This room was for many years the headquarters of Edison's able assistant, Dr. A. E. Kennelly, now professor of electrical engineering in Harvard University, to whose energetic and capable management were intrusted many scientific investigations during his long sojourn at the laboratory. Unfortunately, however, for the continued success of Edison's elaborate plans, he had not been many years established in the laboratory before a trolley road through West Orange was projected and built, the line passing in front of the plant and within seventy-five feet of the galvanometer-room, thus making it practically impossible to use it for the delicate purposes for which it was originally intended.

For some time past it has been used for photography and some special experiments on motion pictures, as well as for demonstrations connected with physical research; but some reminders of its old-time glory still remain in evidence. In lofty and capacious glass-enclosed cabinets, in company with numerous models of Edison's inventions, repose many of the costly and elaborate instruments rendered useless by the ubiquitous trolley. Instruments are all about, on walls, tables, and shelves; the photometer is covered up; induction coils of various capacities, with other electrical paraphernalia, lie around, almost as if the experimenter were absent for a few days but would soon return and resume his work.

In numbering the group of buildings, the galva-

nometer-room is No. 1, while the other single-story structures are numbered respectively 2, 3, and 4. On passing out of No. 1 and proceeding to the succeeding building is noticed, between the two, a garage of ample dimensions and a smaller structure, at the door of which stands a concrete-mixer. In this small building Edison has made some of his most important experiments in the process of working out his plans for the poured house. It is in this little place that there was developed the remarkable mixture which is to play so vital a part in the successful construction of these everlasting homes for living millions.

Drawing near to building No. 2, olfactory evidence presents itself of the immediate vicinity of a chemical laboratory. This is confirmed as one enters the door and finds that the entire building is devoted to chemistry. Long rows of shelves and cabinets filled with chemicals line the room; a profusion of retorts, alembics, filters, and other chemical apparatus on numerous tables and stands, greet the eye, while a corps of experimenters may be seen busy in the preparation of various combinations, some of which are boiling or otherwise cooking under their dexterous manipulation.

It would not require many visits to discover that in this room, also, Edison has a favorite nook. Down at the far end in a corner are a plain little table and chair, and here he is often to be found deeply immersed in a study of the many experiments that are being conducted. Not infrequently he is actively engaged in the manipulation of some compound of

special intricacy, whose results might be illuminative of obscure facts not patent to others than himself. Here, too, is a select little library of chemical literature.

The next building, No. 3, has a double mission—the farther half being partitioned off for a pattern-making shop, while the other half is used as a store-room for chemicals in quantity and for chemical apparatus and utensils. A grimly humorous incident, as related by one of the laboratory staff, attaches to No. 3. It seems that some time ago one of the helpers in the chemical department, an excitable foreigner, became dissatisfied with his wages, and after making an unsuccessful application for an increase, rushed in desperation to Edison, and said: "Eef I not get more money I go to take ze cyanide potassia." Edison gave him one quick, searching glance and, detecting a bluff, replied in an offhand manner: "There's a five-pound bottle in No. 3," and turned to his work again. The foreigner did not go to get the cyanide, but gave up his job.

The last of these original buildings, No. 4, was used for many years in Edison's ore-concentrating experiments, and also for rough-and-ready operations of other kinds, such as furnace work and the like. At the present writing it is used as a general stock-room.

In the foregoing details, the reader has been afforded but a passing glance at the great practical working equipment which constitutes the theatre of Edison's activities, for, in taking a general view of such a unique and comprehensive laboratory plant, its salient features only can be touched upon to advantage.

It would be but repetition to enumerate here the practical results of the laboratory work during the past two decades, as they appear on other pages of this work. Nor can one assume for a moment that the history of Edison's laboratory is a closed book. On the contrary, its territorial boundaries have been increasing step by step with the enlargement of its labors, until now it has been obliged to go outside its own proper domains to occupy some space in and about the great Edison industrial buildings and space immediately adjacent. It must be borne in mind that the laboratory is only the core of a group of buildings devoted to production on a huge scale by hundreds of artisans.

Incidental mention has already been made of the laboratory at Edison's winter residence in Florida, where he goes annually to spend a month or six weeks. This is a miniature copy of the Orange laboratory, with its machine shop, chemical-room, and general experimental department. While it is only in use during his sojourn there, and carries no extensive corps of assistants, the work done in it is not of a perfunctory nature, but is a continuation of his regular activities, and serves to keep him in touch with the progress of experiments at Orange, and enables him to give instructions for their variation and continuance as their scope is expanded by his own investigations made while enjoying what he calls "vacation." What Edison in Florida speaks of as "loafing" would be for most of us extreme and healthy activity in the cooler Far North.

A word or two may be devoted to the visitors received at the laboratory, and to the correspondence.

It might be injudicious to gauge the greatness of a man by the number of his callers or his letters; but they are at least an indication of the degree to which he interests the world. In both respects, for these forty years, Edison has been a striking example of the manner in which the sentiment of hero-worship can manifest itself, and of the deep desire of curiosity to get satisfaction by personal observation or contact. Edison's mail, like that of most well-known men, is extremely large, but composed in no small degree of letters—thousands of them yearly—that concern only the writers, and might well go to the waste-paper basket without prolonged consideration. The serious and important part of the mail, some personal and some business, occupies the attention of several men; all such letters finding their way promptly into the proper channels, often with a pithy endorsement by Edison scribbled on the margin. What to do with a host of others it is often difficult to decide, even when written by "cranks," who imagine themselves subject to strange electrical ailments from which Edison alone can relieve them. Many people write asking his opinion as to a certain invention, or offering him an interest in it if he will work it out. Other people abroad ask help in locating lost relatives; and many want advice as to what they shall do with their sons, frequently budding geniuses whose ability to wire a bell has demonstrated unusual qualities. A great many persons want autographs, and some would like photographs. The amazing thing about it all is that this flood of miscellaneous letters flows on in one steady, uninterrupted stream,

year in and year out; always a curious psychological study in its variety and volume; and ever a proof of the fact that once a man has become established as a personality in the public eye and mind, nothing can stop the tide of correspondence that will deluge him.

It is generally, in the nature of things, easier to write a letter than to make a call; and the semi-retirement of Edison at a distance of an hour by train from New York stands as a means of protection to him against those who would certainly present their respects in person, if he could be got at without trouble. But it may be seriously questioned whether in the aggregate Edison's visitors are less numerous or less time-consuming than his epistolary besiegers. It is the common experience of any visitor to the laboratory that there are usually several persons ahead of him, no matter what the hour of the day, and some whose business has been sufficiently vital to get them inside the porter's gate, or even into the big library and lounging-room. Celebrities of all kinds and distinguished foreigners are numerous—princes, noblemen, ambassadors, artists, littérateurs, scientists, financiers, women. A very large part of the visiting is done by scientific bodies and societies; and then the whole place will be turned over to hundreds of eager, well-dressed men and women, anxious to see everything and to be photographed in the big courtyard around the central hero. Nor are these groups and delegations limited to this country, for even large parties of English, Dutch, Italian, or Japanese visitors come from time to time, and are greeted with

the same ready hospitality, although Edison, it is easy to see, is torn between the conflicting emotions of a desire to be courteous, and an anxiety to guard the precious hours of work, or watch the critical stage of a new experiment.

One distinct group of visitors has always been constituted by the "newspaper men." Hardly a day goes by that the journals do not contain some reference to Edison's work or remarks; and the items are generally based on an interview. The reporters are never away from the laboratory very long; for if they have no actual mission of inquiry, there is always the chance of a good story being secured offhand; and the easy, inveterate good-nature of Edison toward reporters is proverbial in the craft. Indeed, it must be stated here that once in a while this confidence has been abused; that stories have been published utterly without foundation; that interviews have been printed which never took place; that articles with Edison's name as author have been widely circulated, although he never saw them; and that in such ways he has suffered directly. But such occasional incidents tend in no wise to lessen Edison's warm admiration of the press or his readiness to avail himself of it whenever a representative goes over to Orange to get the truth or the real facts in regard to any matter of public importance. As for the newspaper clippings containing such articles, or others in which Edison's name appears—they are literally like sands of the sea-shore for number; and the archives of the laboratory that preserve only a very minute percentage of them are a further demonstration of what publicity means, where a figure like Edison is concerned.

CHAPTER XXVI

EDISON IN COMMERCE AND MANUFACTURE

AN applicant for membership in the Engineers' Club of Philadelphia is required to give a brief statement of the professional work he has done. Some years ago a certain application was made, and contained the following terse and modest sentence:

"I have designed a concentrating plant and built a machine shop, etc., etc. THOMAS A. EDISON."

Although in the foregoing pages the reader has been made acquainted with the tremendous import of the actualities lying behind those "etc., etc.," the narrative up to this point has revealed Edison chiefly in the light of inventor, experimenter, and investigator. There have been some side glimpses of the industries he has set on foot, and of their financial aspects, and a later chapter will endeavor to sum up the intrinsic value of Edison's work to the world. But there are some other interesting points that may be touched on now in regard to a few of Edison's financial and commercial ventures not generally known or appreciated.

It is a popular idea founded on experience that an inventor is not usually a business man. One of the exceptions proving the rule may perhaps be met in Edison, though all depends on the point of view.

All his life he has had a great deal to do with finance and commerce, and as one looks at the magnitude of the vast industries he has helped to create, it would not be at all unreasonable to expect him to be among the multi-millionaires. That he is not is due to the absence of certain qualities, the lack of which Edison is himself the first to admit. Those qualities may not be amiable, but great wealth is hardly ever accumulated without them. If he had not been so intent on inventing he would have made more of his great opportunities for getting rich. If this utter detachment from any love of money for its own sake has not already been illustrated in some of the incidents narrated, one or two stories are available to emphasize the point. They do not involve any want of the higher business acumen that goes to the proper conduct of affairs. It was said of Gladstone that he was the greatest Chancellor of the Exchequer England ever saw, but that as a retail merchant he would soon have ruined himself by his bookkeeping.

Edison confesses that he has never made a cent out of his patents in electric light and power — in fact, that they have been an expense to him, and thus a free gift to the world.[1] This was true of the Euro-

[1] Edison received some stock from the parent lighting company, but as the capital stock of that company was increased from time to time, his proportion grew smaller, and he ultimately used it to obtain ready money with which to create and finance the various "shops" in which were manufactured the various items of electric-lighting apparatus necessary to exploit his system. Besides, he was obliged to raise additional large sums of money from other sources for this purpose. He thus became a manufacturer with capital raised by himself, and the stock that he received later, on the formation of the General Electric Company, was not for his electric-light patents, but was in payment for his manufacturing

pean patents as well as the American. "I endeavored to sell my lighting patents in different countries of Europe, and made a contract with a couple of men. On account of their poor business capacity and lack of practicality, they conveyed under the patents all rights to different corporations but in such a way and with such confused wording of the contracts that I never got a cent. One of the companies started was the German Edison, now the great Allgemeine Elektricitaets Gesellschaft. The English company I never got anything for, because a lawyer had originally advised Drexel, Morgan & Co. as to the signing of a certain document, and said it was all right for me to sign. I signed, and I never got a cent because there was a clause in it which prevented me from ever getting anything." A certain easy-going belief in human nature, and even a certain carelessness of attitude toward business affairs, are here revealed. We have already pointed out two instances where in his dealings with the Western Union Company he stipulated that payments of $6000 per year for seventeen years were to be made instead of $100,000 in cash, evidently forgetful of the fact that the annual sum so received was nothing more than legal interest, which could have been earned indefinitely if the capital had been only insisted upon. In later life Edison has been more circumspect, but throughout his early career he was constantly getting into some kind of scrape. Of one experience he says:

establishments, which had then grown to be of great commercial importance.

"In the early days I was experimenting with metallic filaments for the incandescent light, and sent a certain man out to California in search of platinum. He found a considerable quantity in the sluice-boxes of the Cherokee Valley Mining Company; but just then he found also that fruit-gardening was the thing, and dropped the subject. He then came to me and said that if he could raise $4000 he could go into some kind of orchard arrangement out there, and would give me half the profits. I was unwilling to do it, not having very much money just then, but his persistence was such that I raised the money and gave it to him. He went back to California, and got into mining claims and into fruit-growing, and became one of the politicians of the Coast, and, I believe, was on the staff of the Governor of the State. A couple of years ago he wounded his daughter and shot himself because he had become ruined financially. I never heard from him after he got the money."

Edison tells of another similar episode. "I had two men working for me—one a German, the other a Jew. They wanted me to put up a little money and start them in a shop in New York to make repairs, etc. I put up $800, and was to get half of the profits, and each of them one-quarter. I never got anything for it. A few years afterward I went to see them, and asked what they were doing, and said I would like to sell my interest. They said: 'Sell out what?' 'Why,' I said, 'my interest in the machinery.' They said: 'You don't own this machinery. This is our machinery. You have no papers to show anything. You had better get out.' I am inclined to think that

the percentage of crooked people was smaller when I was young. It has been steadily rising, and has got up to a very respectable figure now. I hope it will never reach par." To which lugubrious episode so provocative of cynicism, Edison adds: "When I was a young fellow the first thing I did when I went to a town was to put something into the savings-bank and start an account. When I came to New York I put $30 into a savings-bank under the New York *Sun* office. After the money had been in about two weeks the bank busted. That was in 1870. In 1909 I got back $6.40, with a charge for $1.75 for law expenses. That shows the beauty of New York receiverships."

It is hardly to be wondered at that Edison is rather frank and unsparing in some of his criticisms of shady modern business methods, and the mention of the following incident always provokes him to a fine scorn. "I had an interview with one of the wealthiest men in New York. He wanted me to sell out my associates in the electric lighting business, and offered me all I was going to get and $100,000 besides. Of course I would not do it. I found out that the reason for this offer was that he had had trouble with Mr. Morgan, and wanted to get even with him." Wall Street is, in fact, a frequent object of rather sarcastic reference, applying even to its regular and probably correct methods of banking. "When I was running my ore-mine," he says, "and got up to the point of making shipments to John Fritz, I didn't have capital enough to carry the ore, so I went to J. P. Morgan & Co. and said I wanted them to give me a letter

to the City Bank. I wanted to raise some money. I got a letter to Mr. Stillman, and went over and told him I wanted to open an account and get some loans and discounts. He turned me down, and would not do it. 'Well,' I said, 'isn't it banking to help a man in this way?' He said: 'What you want is a partner.' I felt very much crestfallen. I went over to a bank in Newark—the Merchants'—and told them what I wanted. They said: 'Certainly, you can have the money.' I made my deposit, and they pulled me through all right. My idea of Wall Street banking has been very poor since that time. Merchant banking seems to be different."

As a general thing, Edison has had no trouble in raising money when he needed it, the reason being that people have faith in him as soon as they come to know him. A little incident bears on this point. "In operating the Schenectady works Mr. Insull and I had a terrible burden. We had enormous orders and little money, and had great difficulty to meet our payrolls and buy supplies. At one time we had so many orders on hand we wanted $200,000 worth of copper, and didn't have a cent to buy it. We went down to the Ansonia Brass and Copper Company, and told Mr. Cowles just how we stood. He said: 'I will see what I can do. Will you let my bookkeeper look at your books?' We said: 'Come right up and look them over.' He sent his man up and found we had the orders and were all right, although we didn't have the money. He said: 'I will let you have the copper.' And for years he trusted us for all the copper we wanted, even if we didn't have the money to pay for it."

It is not generally known that Edison, in addition to being a newsboy and a contributor to the technical press, has also been a backer and an "angel" for various publications. This is perhaps the right place at which to refer to the matter, as it belongs in the list of his financial or commercial enterprises. Edison sums up this chapter of his life very pithily. "I was interested, as a telegrapher, in journalism, and started the *Telegraph Journal*, and got out about a dozen numbers when it was taken over by W. J. Johnston, who afterward founded the *Electrical World* on it as an offshoot from the *Operator*. I also started *Science*, and ran it for a year and a half. It cost me too much money to maintain, and I sold it to Gardiner Hubbard, the father-in-law of Alexander Graham Bell. He carried it along for years." Both these papers are still in prosperous existence, particularly the *Electrical World*, as the recognized exponent of electrical development in America, where now the public spends as much annually for electricity as it does for daily bread.

From all that has been said above it will be understood that Edison's real and remarkable capacity for business does not lie in ability to "take care of himself," nor in the direction of routine office practice, nor even in ordinary administrative affairs. In short, he would and does regard it as a foolish waste of his time to give attention to the mere occupancy of a desk.

His commercial strength manifests itself rather in the outlining of matters relating to organization and broad policy with a sagacity arising from a shrewd

perception and appreciation of general business requirements and conditions, to which should be added his intensely comprehensive grasp of manufacturing possibilities and details, and an unceasing vigilance in devising means of improving the quality of products and increasing the economy of their manufacture.

Like other successful commanders, Edison also possesses the happy faculty of choosing suitable lieutenants to carry out his policies and to manage the industries he has created, such, for instance, as those with which this chapter has to deal—namely, the phonograph, motion picture, primary battery, and storage battery enterprises.

The Portland cement business has already been dealt with separately, and although the above remarks are appropriate to it also, Edison being its head and informing spirit, the following pages are intended to be devoted to those industries that are grouped around the laboratory at Orange, and that may be taken as typical of Edison's methods on the manufacturing side.

Within a few months after establishing himself at the present laboratory, in 1887, Edison entered upon one of those intensely active periods of work that have been so characteristic of his methods in commercializing his other inventions. In this case his labors were directed toward improving the phonograph so as to put it into thoroughly practicable form, capable of ordinary use by the public at large. The net result of this work was the general type of machine of which the well-known phonograph of today is a refinement evolved through many years of sustained experiment and improvement.

After a considerable period of strenuous activity in the eighties, the phonograph and its wax records were developed to a sufficient degree of perfection to warrant him in making arrangements for their manufacture and commercial introduction. At this time the surroundings of the Orange laboratory were distinctly rural in character. Immediately adjacent to the main building and the four smaller structures, constituting the laboratory plant, were grass meadows that stretched away for some considerable distance in all directions, and at its back door, so to speak, ducks paddled around and quacked in a pond undisturbed. Being now ready for manufacturing, but requiring more facilities, Edison increased his real-estate holdings by purchasing a large tract of land lying contiguous to what he already owned. At one end of the newly acquired land two unpretentious brick structures were erected, equipped with first-class machinery, and put into commission as shops for manufacturing phonographs and their record blanks, while the capacious hall forming the third story of the laboratory, over the library, was fitted up and used as a music-room where records were made.

Thus the modern Edison phonograph made its modest début in 1888, in what was then called the "Improved" form to distinguish it from the original style of machine he invented in 1877, in which the record was made on a sheet of tin-foil held in place upon a metallic cylinder. The "Improved" form is the general type so well known for many years and sold at the present day—*viz.*, the spring or electric

motor-driven machine with the cylindrical wax record—in fact, the regulation Edison phonograph.

It did not take a long time to find a market for the products of the newly established factory, for a world-wide public interest in the machine had been created by the appearance of newspaper articles from time to time, announcing the approaching completion by Edison of his improved phonograph. The original (tin-foil) machine had been sufficient to illustrate the fact that the human voice and other sounds could be recorded and reproduced, but such a type of machine had sharp limitations in general use; hence the coming into being of a type that any ordinary person could handle was sufficient of itself to insure a market. Thus the demand for the new machines and wax records grew apace as the corporations organized to handle the business extended their lines. An examination of the newspaper files of the years 1888, 1889, and 1890 will reveal the great excitement caused by the bringing out of the new phonograph, and how frequently and successfully it was employed in public entertainments, either for the whole or part of an evening. In this and other ways it became popularized to a still further extent. This led to the demand for a nickel-in-the-slot machine, which, when established, became immensely popular over the whole country. In its earlier forms the "Improved" phonograph was not capable of such general non-expert handling as is the machine of the present day, and consequently there was a constant endeavor on Edison's part to simplify the construction of the machine and its manner of opera-

tion. Experimentation was incessantly going on with this in view, and in the processes of evolution changes were made here and there that resulted in a still greater measure of perfection.

In various ways there was a continual slow and steady growth of the industry thus created, necessitating the erection of many additional buildings as the years passed by. During part of the last decade there was a lull, caused mostly from the failure of corporate interests to carry out their contract relations with Edison, and he was thereby compelled to resort to legal proceedings, at the end of which he bought in the outstanding contracts and assumed command of the business personally.

Being thus freed from many irksome restrictions that had hung heavily upon him, Edison now proceeded to push the phonograph business under a broader policy than that which obtained under his previous contractual relations. With the ever-increasing simplification and efficiency of the machine and a broadening of its application, the results of this policy were manifested in a still more rapid growth of the business that necessitated further additions to the manufacturing plant. And thus matters went on until the early part of the present decade, when the factory facilities were becoming so rapidly outgrown as to render radical changes necessary. It was in these circumstances that Edison's sagacity and breadth of business capacity came to the front. With characteristic boldness and foresight he planned the erection of the series of magnificent concrete buildings that now stand adjacent to and around the

laboratory, and in which the manufacturing plant is at present housed.

There was no narrowness in his views in designing these buildings, but, on the contrary, great faith in the future, for his plans included not only the phonograph industry, but provided also for the coming development of motion pictures and of the primary and storage battery enterprises.

In the aggregate there are twelve structures (including the administration building), of which six are of imposing dimensions, running from 200 feet long by 50 feet wide to 440 feet in length by 115 feet in width, all these larger buildings, except one, being five stories in height. They are constructed entirely of reinforced concrete with Edison cement, including walls, floors, and stairways, thus eliminating fire hazard to the utmost extent, and insuring a high degree of protection, cleanliness, and sanitation. As fully three-fourths of the area of their exterior framework consists of windows, an abundance of daylight is secured. These many advantages, combined with lofty ceilings on every floor, provide ideal conditions for the thousands of working people engaged in this immense plant.

In addition to these twelve concrete structures there are a few smaller brick and wooden buildings on the grounds, in which some special operations are conducted. These, however, are few in number, and at some future time will be concentrated in one or more additional concrete buildings. It will afford a clearer idea of the extent of the industries clustered immediately around the laboratory when it is stated

that the combined floor space which is occupied by them in all these buildings is equivalent in the aggregate to over fourteen acres.

It would be instructive, but scarcely within the scope of the narrative, to conduct the reader through this extensive plant and see its many interesting operations in detail. It must suffice, however, to note its complete and ample equipment with modern machinery of every kind applicable to the work; its numerous (and some of them wonderfully ingenious) methods, processes, machines, and tools specially designed or invented for the manufacture of special parts and supplemental appliances for the phonograph or other Edison products; and also to note the interesting variety of trades represented in the different departments, in which are included chemists, electricians, electrical mechanicians, machinists, mechanics, pattern-makers, carpenters, cabinet-makers, varnishers, japanners, tool-makers, lapidaries, wax experts, photographic developers and printers, opticians, electroplaters, furnacemen, and others, together with factory experimenters and a host of general employees, who by careful training have become specialists and experts in numerous branches of these industries.

Edison's plans for this manufacturing plant were sufficiently well outlined to provide ample capacity for the natural growth of the business; and although that capacity (so far as phonographs is concerned) has actually reached an output of over 6000 complete phonographs *per week*, and upward of 130,000 molded records *per day*—with a pay-roll embracing

over 3500 employees, including office force — and amounting to about $45,000 per week—the limits of production have not yet been reached.

The constant outpouring of products in such large quantities bespeaks the unremitting activities of an extensive and busy selling organization to provide for their marketing and distribution. This important department (the National Phonograph Company), in all its branches, from president to office-boy, includes about two hundred employees on its office pay-roll, and makes its headquarters in the administration building, which is one of the large concrete structures above referred to. The policy of the company is to dispose of its wares through regular trade channels rather than to deal direct with the public, trusting to local activity as stimulated by a liberal policy of national advertising. Thus, there has been gradually built up a very extensive business until at the present time an enormous output of phonographs and records is distributed to retail customers in the United States and Canada through the medium of about one hundred and fifty jobbers and over thirteen thousand dealers. The Edison phonograph industry thus organized is helped by frequent conventions of this large commercial force.

Besides this, the National Phonograph Company maintains a special staff for carrying on the business with foreign countries. While the aggregate transactions of this department are not as extensive as those for the United States and Canada, they are of considerable volume, as the foreign office distributes in bulk a very large number of phonographs and rec-

ords to selling companies and agencies in Europe, Asia, Australia, Japan, and, indeed, to all the countries of the civilized world.[1] Like England's drumbeat, the voice of the Edison phonograph is heard around the world in undying strains throughout the twenty-four hours.

In addition to the main manufacturing plant at Orange, another important adjunct must not be forgotten, and that is, the Recording Department in New York City, where the master records are made under the superintendence of experts who have studied the intricacies of the art with Edison himself. This department occupies an upper story in a lofty building, and in its various rooms may be seen and heard many prominent musicians, vocalists, speakers, and vaudeville artists studiously and busily engaged in making the original records, which are afterward sent to Orange, and which, if approved by the expert committee, are passed on to the proper department for reproduction in large quantities.

When we consider the subject of motion pictures we find a similarity in general business methods, for

[1] It may be of interest to the reader to note some parts of the globe to which shipments of phonographs and records are made:

Samoan Islands	British East Africa	Morocco
Falkland Islands	Cape Colony	Ecuador
Siam	Portuguese East Africa	Brazil
Corea	Liberia	Madeira
Crete Island	Java	South Africa
Paraguay	Straits Settlements	Azores
Chile	Madagascar	Manchuria
Canary Islands	Fanning Islands	Ceylon
Egypt	New Zealand	Sierra Leone
	French Indo-China	

while the projecting machines and copies of picture films are made in quantity at the Orange works (just as phonographs and duplicate records are so made), the original picture, or film, like the master record, is made elsewhere. There is this difference, however: that, from the particular nature of the work, practically *all* master records are made at one convenient place, while the essential interest in *some* motion pictures lies in the fact that they are taken in various parts of the world, often under exceptional circumstances. The "silent drama," however, calls also for many representations which employ conventional acting, staging, and the varied appliances of stagecraft. Hence, Edison saw early the necessity of providing a place especially devised and arranged for the production of dramatic performances in pantomime.

It is a far cry from the crude structure of early days—the "Black Maria" of 1891, swung around on its pivot in the Orange laboratory yard—to the well-appointed Edison theatres, or pantomime studios, in New York City. The largest of these is located in the suburban Borough of the Bronx, and consists of a three-story-and-basement building of reinforced concrete, in which are the offices, dressing-rooms, wardrobe and property-rooms, library and developing department. Contiguous to this building, and connected with it, is the theatre proper, a large and lofty structure whose sides and roof are of glass, and whose floor space is sufficiently ample for six different sets of scenery at one time, with plenty of room left for a profusion of accessories, such as tables, chairs,

pianos, bunch-lights, search-lights, cameras, and a host of varied paraphernalia pertaining to stage effects.

The second Edison theatre, or studio, is located not far from the shopping district in New York City. In all essential features, except size and capacity, it is a duplicate of the one in the Bronx, of which it is a supplement.

To a visitor coming on the floor of such a theatre for the first time there is a sense of confusion in beholding the heterogeneous "sets" of scenery and the motley assemblage of characters represented in the various plays in the process of "taking," or rehearsal. While each set constitutes virtually a separate stage, they are all on the same floor, without wings or proscenium-arches, and separated only by a few feet. Thus, for instance, a Japanese house interior may be seen cheek by jowl with an ordinary prison cell, flanked by a mining-camp, which in turn stands next to a drawing-room set, and in each a set of appropriate characters in pantomimic motion. The action is incessant, for in any dramatic representation intended for the motion-picture film every second counts.

The production of several completed plays per week necessitates the employment of a considerable staff of people of miscellaneous trades and abilities. At each of these two studios there is employed a number of stage-directors, scene-painters, carpenters, property-men, photographers, costumers, electricians, clerks, and general assistants, besides a capable stock company of actors and actresses, whose generous num-

bers are frequently augmented by the addition of a special star, or by a number of extra performers, such as Rough Riders or other specialists. It may be, occasionally, that the exigencies of the occasion require the work of a performing horse, dog, or other animal. No matter what the object required may be, whether animate or inanimate, if it is necessary for the play it is found and pressed into service.

These two studios, while separated from the main plant, are under the same general management, and their original negative films are forwarded as made to the Orange works, where the large copying department is located in one of the concrete buildings. Here, after the film has been passed upon by a committee, a considerable number of positive copies are made by ingenious processes, and after each one is separately tested, or "run off," in one or other of the three motion-picture theatres in the building, they are shipped out to film exchanges in every part of the country. How extensive this business has become may be appreciated when it is stated that at the Orange plant there are produced at this time over eight million feet of motion-picture film per year. And Edison's company is only one of many producers.

Another of the industries at the Orange works is the manufacture of projecting kinetoscopes, by means of which the motion pictures are shown. While this of itself is also a business of considerable magnitude in its aggregate yearly transactions, it calls for no special comment in regard to commercial production, except to note that a corps of experimenters is con-

stantly employed refining and perfecting details of the machine. Its basic features of operation as conceived by Edison remain unchanged.

On coming to consider the Edison battery enterprises, we must perforce extend the territorial view to include a special chemical-manufacturing plant, which is in reality a branch of the laboratory and the Orange works, although actually situated about three miles away.

Both the primary and the storage battery employ certain chemical products as essential parts of their elements, and indeed owe their very existence to the peculiar preparation and quality of such products, as exemplified by Edison's years of experimentation and research. Hence the establishment of his own chemical works at Silver Lake, where, under his personal supervision, the manufacture of these products is carried on in charge of specially trained experts. At the present writing the plant covers about seven acres of ground; but there is ample room for expansion, as Edison, with wise forethought, secured over forty acres of land, so as to be prepared for developments.

Not only is the Silver Lake works used for the manufacture of the chemical substances employed in the batteries, but it is the plant at which the Edison primary battery is wholly assembled and made up for distribution to customers. This in itself is a business of no small magnitude, having grown steadily on its merits year by year until it has now arrived at a point where its sales run into the hundreds of thousands of cells per annum, furnished largely to the steam railroads of the country for their signal service.

As to the storage battery, the plant at Silver Lake is responsible only for the production of the chemical compounds, nickel-hydrate and iron oxide, which enter into its construction. All the mechanical parts, the nickel plating, the manufacture of nickel flake, the assembling and testing, are carried on at the Orange works in two of the large concrete buildings above referred to. A visit to this part of the plant reveals an amazing fertility of resourcefulness and ingenuity in the devising of the special machines and appliances employed in constructing the mechanical parts of these cells, for it is practically impossible to fashion them by means of machinery and tools to be found in the open market, notwithstanding the immense variety that may be there obtained.

Since Edison completed his final series of investigations on his storage battery and brought it to its present state of perfection, the commercial values have increased by leaps and bounds. The battery, as it was originally put out some years ago, made for itself an enviable reputation; but with its improved form there has come a vast increase of business. Although the largest of the concrete buildings where its manufacture is carried on is over four hundred feet long and four stories in height, it has already become necessary to plan extensions and enlargements of the plant in order to provide for the production of batteries to fill the present demands. It was not until the summer of 1909 that Edison was willing to pronounce the final verdict of satisfaction with regard to this improved form of storage battery; but subsequent commercial results have justified his

judgment, and it is not too much to predict that in all probability the business will assume gigantic proportions within a very few years. At the present time (1910) the Edison storage-battery enterprise is in its early stages of growth, and its status may be compared with that of the electric-light system about the year 1881.

There is one more industry, though of comparatively small extent, that is included in the activities of the Orange works, namely, the manufacture and sale of the Bates numbering machine. This is a well-known article of commerce, used in mercantile establishments for the stamping of consecutive, duplicate, and manifold numbers on checks and other documents. It is not an invention of Edison, but the organization owning it, together with the patent rights, were acquired by him some years ago, and he has since continued and enlarged the business both in scope and volume, besides, of course, improving and perfecting the apparatus itself. These machines are known everywhere throughout the country, and while the annual sales are of comparatively moderate amount in comparison with the totals of the other Edison industries at Orange, they represent in the aggregate a comfortable and encouraging business.

In this brief outline review of the flourishing and extensive commercial enterprises centred around the Orange laboratory, the facts, it is believed, contain a complete refutation of the idea that an inventor cannot be a business man. They also bear abundant evidence of the compatibility of these two widely divergent gifts existing, even to a high degree, in the

same person. A striking example of the correctness of this proposition is afforded in the present case, when it is borne in mind that these various industries above described (whose annual sales run into many millions of dollars) owe not only their very creation (except the Bates machine) and existence to Edison's inventive originality and commercial initiative, but also their continued growth and prosperity to his incessant activities in dealing with their multifarious business problems. In publishing a portrait of Edison this year, one of the popular magazines placed under it this caption: "Were the Age called upon to pay Thomas A. Edison all it owes to him, the Age would have to make an assignment." The present chapter will have thrown some light on the idiosyncrasies of Edison as financier and as manufacturer, and will have shown that while the claim thus suggested may be quite good, it will certainly never be pressed or collected.

CHAPTER XXVII

THE VALUE OF EDISON'S INVENTIONS TO THE WORLD

IF the world were to take an account of stock, so to speak, and proceed in orderly fashion to marshal its tangible assets in relation to dollars and cents, the natural resources of our globe, from centre to circumference, would head the list. Next would come inventors, whose value to the world as an asset could be readily estimated from an increase of its wealth resulting from the actual transformations of these resources into items of convenience and comfort through the exercise of their inventive ingenuity.

Inventors of practical devices may be broadly divided into two classes—first, those who may be said to have made two blades of grass grow where only one grew before; and, second, great inventors, who have made grass grow plentifully on hitherto unproductive ground. The vast majority of practical inventors belong to and remain in the first of these divisions, but there have been, and probably always will be, a less number who, by reason of their greater achievements, are entitled to be included in both classes. Of these latter, Thomas Alva Edison is one, but in the pages of history he stands conspicuously

pre-eminent—a commanding, towering figure, even among giants.

The activities of Edison have been of such great range, and his conquests in the domains of practical arts so extensive and varied, that it is somewhat difficult to estimate with any satisfactory degree of accuracy the money value of his inventions to the world of to-day, even after making due allowance for the work of other great inventors and the propulsive effect of large amounts of capital thrown into the enterprises which took root, wholly or in part, through the productions of his genius and energies. This difficulty will be apparent, for instance, when we consider his telegraph and telephone inventions. These were absorbed in enterprises already existing, and were the means of assisting their rapid growth and expansion, particularly the telephone industry. Again, in considering the fact that Edison was one of the first in the field to design and perfect a practical and operative electric railway, the main features of which are used in all electric roads of to-day, we are confronted with the problem as to what proportion of their colossal investment and earnings should be ascribed to him.

Difficulties are multiplied when we pause for a moment to think of Edison's influence on collateral branches of business. In the public mind he is credited with the invention of the incandescent electric light, the phonograph, and other widely known devices; but how few realize his actual influence on other trades that are not generally thought of in connection with these things. For instance, let us note

what a prominent engine builder, the late Gardiner C. Sims, has said: "Watt, Corliss, and Porter brought forward steam-engines to a high state of proficiency, yet it remained for Mr. Edison to force better proportions, workmanship, designs, use of metals, regulation, the solving of the complex problems of high speed and endurance, and the successful development of the shaft governor. Mr. Edison is pre-eminent in the realm of engineering."

The phenomenal growth of the copper industry was due to a rapid and ever-increasing demand, owing to the exploitation of the telephone, electric light, electric motor, and electric railway industries. Without these there might never have been the romance of "Coppers" and the rise and fall of countless fortunes. And although one cannot estimate in definite figures the extent of Edison's influence in the enormous increase of copper production, it is to be remembered that his basic inventions constitute a most important factor in the demand for the metal. Besides, one must also give him the credit, as already noted, for having recognized the necessity for a pure quality of copper for electric conductors, and for his persistence in having compelled the manufacturers of that period to introduce new and additional methods of refinement so as to bring about that result, which is now a *sine qua non.*

Still considering his influence on other staples and collateral trades, let us enumerate briefly and in a general manner some of the more important and additional ones that have been not merely stimulated, but in many cases the business and sales have been

directly increased and new arts established through the inventions of this one man—namely, iron, steel, brass, zinc, nickel, platinum ($5 per ounce in 1878, now $26 an ounce), rubber, oils, wax, bitumen, various chemical compounds, belting, boilers, injectors, structural steel, iron tubing, glass, silk, cotton, porcelain, fine woods, slate, marble, electrical measuring instruments, miscellaneous machinery, coal, wire, paper, building materials, sapphires, and many others.

The question before us is, To what extent has Edison added to the wealth of the world by his inventions and his energy and perseverance? It will be noted from the foregoing that no categorical answer can be offered to such a question, but sufficient material can be gathered from a statistical review of the commercial arts directly influenced to afford an approximate idea of the increase in national wealth that has been affected by or has come into being through the practical application of his ideas.

First of all, as to inventions capable of fairly definite estimate, let us mention the incandescent electric light and systems of distribution of electric light, heat, and power, which may justly be considered as the crowning inventions of Edison's life. Until October 21, 1879, there was nothing in existence resembling our modern incandescent lamp. On that date, as we have seen in a previous chapter, Edison's labors culminated in his invention of a practical incandescent electric lamp embodying absolutely all the essentials of the lamp of to-day, thus opening to the world the doors of a new art and industry. To-day there are in the United States more than 41,000,000

of these lamps, connected to existing central-station circuits in active operation.

Such circuits necessarily imply the existence of central stations with their equipment. Until the beginning of 1882 there were only a few arc-lighting stations in existence for the limited distribution of current. At the present time there are over 6000 central stations in this country for the distribution of electric current for light, heat, and power, with capital obligations amounting to not less than $1,000,000,000. Besides the above-named 41,000,000 incandescent lamps connected to their mains, there are about 500,000 arc lamps and 150,000 motors, using 750,000 horse-power, besides countless fan motors and electric heating and cooking appliances.

When it is stated that the gross earnings of these central stations approximate the sum of $225,000,000 yearly, the significant import of these statistics of an art that came so largely from Edison's laboratory about thirty years ago will undoubtedly be apparent.

But the above are not by any means all the facts relating to incandescent electric lighting in the United States, for in addition to central stations there are upward of 100,000 isolated or private plants in mills, factories, steamships, hotels, theatres, etc., owned by the persons or concerns who operate them. These plants represent an approximate investment of $500,000,000, and the connection of not less than 25,000,000 incandescent lamps or their equivalent.

Then there are the factories where these incandescent lamps are made, about forty in number, repre-

senting a total investment that may be approximated at $25,000,000. It is true that many of these factories are operated by other than the interests which came into control of the Edison patents (General Electric Company), but the 150,000,000 incandescent electric lamps now annually made are broadly covered in principle by Edison's fundamental ideas and patents.

It will be noted that these figures are all in round numbers, but they are believed to be well within the mark, being primarily founded upon the special reports of the Census Bureau issued in 1902 and 1907, with the natural increase from that time computed by experts who are in position to obtain the facts. It would be manifestly impossible to give exact figures of such a gigantic and swiftly moving industry, whose totals increase from week to week.

The reader will naturally be disposed to ask whether it is intended to claim that Edison has brought about all this magnificent growth of the electric-lighting art. The answer to this is decidedly in the negative, for the fact is that he laid some of the foundation and erected a building thereon, and in the natural progressive order of things other inventors of more or less fame have laid substructures or added a wing here and a story there until the resultant great structure has attained such proportions as to evoke the admiration of the beholder; but the old foundation and the fundamental building still remain to support other parts. In other words, Edison created the incandescent electric lamp, and invented certain broad and fundamental systems of distribution of

current, with all the essential devices of detail necessary for successful operation. These formed a foundation. He also spent great sums of money and devoted several years of patient labor in the early practical exploitation of the dynamo and central station and isolated plants, often under adverse and depressing circumstances, with a dogged determination that outlived an opposition steadily threatening defeat. These efforts resulted in the firm commercial establishment of modern electric lighting. It is true that many important inventions of others have a distinguished place in the art as it is exploited to-day, but the fact remains that the broad essentials, such as the incandescent lamp, systems of distribution, and some important details, are not only universally used, but are as necessary to-day for successful commercial practice as they were when Edison invented them many years ago.

The electric railway next claims our consideration, but we are immediately confronted by a difficulty which seems insurmountable when we attempt to formulate any definite estimate of the value and influence of Edison's pioneer work and inventions. There is one incontrovertible fact—namely, that he was the first man to devise, construct, and operate from a central station a practicable, life-size electric railroad, which was capable of transporting and did transport passengers and freight at variable speeds over varying grades, and under complete control of the operator. These are the essential elements in all electric railroading of the present day; but while Edison's original broad ideas are embodied

in present practice, the perfection of the modern electric railway is greatly due to the labors and inventions of a large number of other well-known inventors. There was no reason why Edison could not have continued the commercial development of the electric railway after he had helped to show its practicability in 1880, 1881, and 1882, just as he had completed his lighting system, had it not been that his financial allies of the period lacked faith in the possibilities of electric railroads, and therefore declined to furnish the money necessary for the purpose of carrying on the work.

With these facts in mind, we shall ask the reader to assign to Edison a due proportion of credit for his pioneer and basic work in relation to the prodigious development of electric railroading that has since taken place. The statistics of 1908 for American street and elevated railways show that within twenty-five years the electric-railway industry has grown to embrace 38,812 miles of track on streets and for elevated railways, operated under the ownership of 1238 separate companies, whose total capitalization amounted to the enormous sum of $4,123,834,598. In the equipments owned by such companies there are included 68,636 electric cars and 17,568 trailers and others, making a total of 86,204 of such vehicles. These cars and equipments earned over $425,000,000 in 1907, in giving the public transportation, at a cost, including transfers, of a little over three cents per passenger, for whom a fifteen-mile ride would be possible. It is the cheapest transportation in the world.

Some mention should also be made of the great electrical works of the country, in which the dynamos, motors, and other varied paraphernalia are made for electric lighting, electric railway, and other purposes. The largest of these works is undoubtedly that of the General Electric Company at Schenectady, New York, a continuation and enormous enlargement of the shops which Edison established there in 1886. This plant at the present time embraces over 275 acres, of which sixty acres are covered by fifty large and over one hundred small buildings; besides which the company also owns other large plants elsewhere, representing a total investment approximating the sum of $34,850,000 up to 1908. The productions of the General Electric Company alone average annual sales of nearly $75,000,000, but they do not comprise the total of the country's manufactures in these lines.

Turning our attention now to the telephone, we again meet a condition that calls for thoughtful consideration before we can properly appreciate how much the growth of this industry owes to Edison's inventive genius. In another place there has already been told the story of the telephone, from which we have seen that to Alexander Graham Bell is due the broad idea of transmission of speech by means of an electrical circuit; also that he invented appropriate instruments and devices through which he accomplished this result, although not to that extent which gave promise of any great commercial practicability for the telephone as it then existed. While the art was in this inefficient condition, Edison went to work

on the subject, and in due time, as we have already learned, invented and brought out the carbon transmitter, which is universally acknowledged to have been the needed device that gave to the telephone the element of commercial practicability, and has since led to its phenomenally rapid adoption and world-wide use. It matters not that others were working in the same direction, Edison was legally adjudicated to have been the first to succeed in point of time, and his inventions were put into actual use, and may be found in principle in every one of the 7,000,000 telephones which are estimated to be employed in the country at the present day. Basing the statements upon facts shown by the Census reports of 1902 and 1907, and adding thereto the growth of the industry since that time, we find on a conservative estimate that at this writing the investment has been not less than $800,000,000 in now existing telephone systems, while no fewer than 10,500,000,000 talks went over the lines during the year 1908. These figures relate only to telephone systems, and do not include any details regarding the great manufacturing establishments engaged in the construction of telephone apparatus, of which there is a production amounting to at least $15,000,000 per annum.

Leaving the telephone, let us now turn our attention to the telegraph, and endeavor to show as best we can some idea of the measure to which it has been affected by Edison's inventions. Although, as we have seen in a previous part of this book, his earliest fame arose from his great practical work in telegraphic inventions and improvements, there is no way in which any

definite computation can be made of the value of his contributions in the art except, perhaps, in the case of his quadruplex, through which alone it is estimated that there has been saved from $15,000,000 to $20,000,000 in the cost of line construction in this country. If this were the only thing that he had ever accomplished, it would entitle him to consideration as an inventor of note. The quadruplex, however, has other material advantages, but how far they and the natural growth of the business have contributed to the investment and earnings of the telegraph companies, is beyond practicable computation.

It would, perhaps, be interesting to speculate upon what might have been the growth of the telegraph and the resultant benefit to the community had Edison's automatic telegraph inventions been allowed to take their legitimate place in the art, but we shall not allow ourselves to indulge in flights of fancy, as the value of this chapter rests not upon conjecture, but only upon actual fact. Nor shall we attempt to offer any statistics regarding Edison's numerous inventions relating to telegraphs and kindred devices, such as stock tickers, relays, magnets, rheotomes, repeaters, printing telegraphs, messenger calls, etc., on which he was so busily occupied as an inventor and manufacturer during the ten years that began with January, 1869. The principles of many of these devices are still used in the arts, but have become so incorporated in other devices as to be inseparable, and cannot now be dealt with separately. To show what they mean, however, it might be noted that New York City alone has 3000

stock "tickers," consuming 50,000 miles of record tape every year.

Turning now to other important arts and industries which have been created by Edison's inventions, and in which he is at this time taking an active personal interest, let us visit Orange, New Jersey. When his present laboratory was nearing completion in 1887, he wrote to Mr. J. Hood Wright, a partner in the firm of Drexel, Morgan & Co.: "My ambition is to build up a great industrial works in the Orange Valley, starting in a small way and gradually working up."

In this plant, which represents an investment approximating the sum of $4,000,000, are grouped a number of industrial enterprises of which Edison is either the sole or controlling owner and the guiding spirit. These enterprises are the National Phonograph Company, the Edison Business Phonograph Company, the Edison Phonograph Works, the Edison Manufacturing Company, the Edison Storage Battery Company, and the Bates Manufacturing Company. The importance of these industries will be apparent when it is stated that at this plant the maximum pay-roll shows the employment of over 4200 persons, with annual earnings in salaries and wages of more than $2,750,000.

In considering the phonograph in its commercial aspect, and endeavoring to arrive at some idea of the world's estimate of the value of this invention, we feel the ground more firm under our feet, for Edison has in later years controlled its manufacture and sale. It will be remembered that the phonograph lay dormant, commercially speaking, for about ten years

after it came into being, and then later invention reduced it to a device capable of more popular utility. A few years of rather unsatisfactory commercial experience brought about a reorganization, through which Edison resumed possession of the business. It has since been continued under his general direction and ownership, and he has made a great many additional inventions tending to improve the machine in all its parts.

The uses made of the phonograph up to this time have been of four kinds, generally speaking—first, and principally, for amusement; second, for instruction in languages; third, for business, in the dictation of correspondence; and fourth, for sentimental reasons in preserving the voices of friends. No separate figures are available to show the extent of its employment in the second and fourth classes, as they are probably included in machines coming under the first subdivision. Under this head we find that there have been upward of 1,310,000 phonographs sold during the last twenty years, with and for which there have been made and sold no fewer than 97,845,000 records of a musical or other character. Phonographic records are now being manufactured at Orange at the rate of 75,000 a day, the annual sale of phonographs and records being approximately $7,000,000, including business phonographs. This does not include blank records, of which large numbers have also been supplied to the public.

The adoption of the business phonograph has not been characterized by the unanimity that obtained in the case of the one used merely for amusement, as

its use involves some changes in methods that business men are slow to adopt until they realize the resulting convenience and economy. Although it is only a few years since the business phonograph has begun to make some headway, it is not difficult to appreciate that Edison's prediction in 1878 as to the value of such an appliance is being realized, when we find that up to this time the sales run up to 12,695 in number. At the present time the annual sales of the business phonographs and supplies, cylinders, etc., are not less than $350,000.

We must not forget that the basic patent of Edison on the phonograph has long since expired, thus throwing open to the world the wonderful art of reproducing human speech and other sounds. The world was not slow to take advantage of the fact, hence there are in the field numerous other concerns in the same business. It is conservatively estimated by those who know the trade and are in position to form an opinion, that the figures above given represent only about one-half of the entire business of the country in phonographs, records, cylinders, and supplies.

Taking next his inventions that pertain to a more recently established but rapidly expanding branch of business that provides for the amusement of the public, popularly known as "motion pictures," we also find a general recognition of value created. Referring the reader to a previous chapter for a discussion of Edison's standing as a pioneer inventor in this art, let us glance at the commercial proportions of this young but lusty business, whose ramifications

extend to all but the most remote and primitive hamlets of our country.

The manufacture of the projecting machines and accessories, together with the reproduction of films, is carried on at the Orange Valley plant, and from the inception of the motion-picture business to the present time there have been made upward of 16,000 projecting machines and many million feet of films carrying small photographs of moving objects. Although the motion-picture business, as a commercial enterprise, is still in its youth, it is of sufficient moment to call for the annual production of thousands of machines and many million feet of films in Edison's shops, having a sale value of not less than $750,000. To produce the originals from which these Edison films are made, there have been established two "studios," the largest of which is in the Bronx, New York City.

In this, as well as in the phonograph business, there are many other manufacturers in the field. Indeed, the annual product of the Edison Manufacturing Company in this line is only a fractional part of the total that is absorbed by the 8000 or more motion-picture theatres and exhibitions that are in operation in the United States at the present time, and which represent an investment of some $45,000,000. Licensees under Edison patents in this country alone produce upward of 60,000,000 feet of films annually, containing more than a billion and a half separate photographs. To what extent the motion-picture business may grow in the not remote future it is impossible to conjecture, for it has taken

a place in the front rank of rapidly increasing enterprises.

The manufacture and sale of the Edison-Lalande primary battery, conducted by the Edison Manufacturing Company at the Orange Valley plant, is a business of no mean importance. Beginning about twenty years ago with a battery that, without polarizing, would furnish large currents specially adapted for gas-engine ignition and other important purposes, the business has steadily grown in magnitude until the present output amounts to about 125,000 cells annually; the total number of cells put into the hands of the public up to date being approximately 1,500,000. It will be readily conceded that to most men this alone would be an enterprise of a lifetime, and sufficient in itself to satisfy a moderate ambition. But, although it has yielded a considerable profit to Edison and gives employment to many people, it is only one of the many smaller enterprises that owe an existence to his inventive ability and commercial activity.

So it also is in regard to the mimeograph, whose forerunner, the electric pen, was born of Edison's brain in 1877. He had been long impressed by the desirability of the rapid production of copies of written documents, and, as we have seen by a previous chapter, he invented the electric pen for this purpose, only to improve upon it later with a more desirable device which he called the mimeograph, that is in use, in various forms, at this time. Although the electric pen had a large sale and use in its time, the statistics relating to it are not available. The mimeo-

graph, however, is, and has been for many years, a standard office appliance, and is entitled to consideration, as the total number put into use up to this time is approximately 180,000, valued at $3,500,000, while the annual output is in the neighborhood of 9000 machines, sold for about $150,000, besides the vast quantity of special paper and supplies which its use entails in the production of the many millions of facsimile letters and documents. The extent of production and sale of supplies for the mimeograph may be appreciated when it is stated that they bring annually an equivalent of three times the amount realized from sales of machines. The manufacture and sale of the mimeograph does not come within the enterprises conducted under Edison's personal direction, as he sold out the whole thing some years ago to Mr. A. B. Dick, of Chicago.

In making a somewhat radical change of subject, from duplicating machines to cement, we find ourselves in a field in which Edison has made a most decided impression. The reader has already learned that his entry into this field was, in a manner, accidental, although logically in line with pronounced convictions of many years' standing, and following up the fund of knowledge gained in the magnetic ore-milling business. From being a new-comer in the cement business, his corporation in five years has grown to be the fifth largest producer in the United States, with a still increasing capacity. From the inception of this business there has been a steady and rapid development, resulting in the production of a grand total of over 7,300,000 barrels of cement up to the

present date, having a value of about $6,000,000, exclusive of package. At the time of this writing, the rate of production is over 8000 barrels of cement per day, or, say, 2,500,000 barrels per year, having an approximate selling value of a little less than $2,000,000, with prospects of increasing in the near future to a daily output of 10,000 barrels. This enterprise is carried on by a corporation called the Edison Portland Cement Company, in which he is very largely interested, and of which he is the active head and guiding spirit.

Had not Edison suspended the manufacture and sale of his storage battery a few years ago because he was not satisfied with it, there might have been given here some noteworthy figures of an extensive business, for the company's books show an astonishing number of orders that were received during the time of the shut-down. He was implored for batteries, but in spite of the fact that good results had been obtained from the 18,000 or 20,000 cells sold some years ago, he adhered firmly to his determination to perfect them to a still higher standard before resuming and continuing their manufacture as a regular commodity. As we have noted in a previous chapter, however, deliveries of the perfected type were begun in the summer of 1909, and since that time the business has continued to grow in the measure indicated by the earlier experience.

Thus far we have concerned ourselves chiefly with those figures which exhibit the extent of investment and production, but there is another and humanly important side that presents itself for consideration—

namely, the employment of a vast industrial army of men and women, who earn a living through their connection with some of the arts and industries to which our narrative has direct reference. To this the reader's attention will now be drawn.

The following figures are based upon the Special Reports of the Census Bureau, 1902 and 1907, with additions computed upon the increase that has subsequently taken place. In the totals following is included the compensation paid to salaried officials and clerks. Details relating to telegraph systems are omitted.

Taking the electric light into consideration first, we find that in the central stations of the United States there are not less than an average of 50,000 persons employed, requiring an aggregate yearly pay-roll of over $40,000,000. This does not include the 100,000 or more isolated electric-light plants scattered throughout the land. Many of these are quite large, and at least one-third of them require one additional helper, thus adding, say, 33,000 employees to the number already mentioned. If we assume as low a wage as $10 per week for each of these helpers, we must add to the foregoing an additional sum of over $17,000,000 paid annually for wages, almost entirely in the isolated incandescent electric lighting field.

Central stations and isolated plants consume over 100,000,000 incandescent electric lamps annually, and in the production of these there are engaged about forty factories, on whose pay-rolls appear an average of 14,000 employees, earning an aggregate yearly sum of $8,000,000.

Following the incandescent lamp we must not forget an industry exclusively arising from it and absolutely dependent upon it—namely, that of making fixtures for such lamps, the manufacture of which gives employment to upward of 6000 persons, who annually receive at least $3,750,000 in compensation.

The detail devices of the incandescent electric lighting system also contribute a large quota to the country's wealth in the millions of dollars paid out in salaries and wages to many thousands of persons who are engaged in their manufacture.

The electric railways of our country show even larger figures than the lighting stations and plants, as they employ on the average over 250,000 persons, whose annual compensation amounts to not less than $155,000,000.

In the manufacture of about $50,000,000 worth of dynamos and motors annually, for central-station equipment, isolated plants, electric railways, and other purposes, the manufacturers of the country employ an average of not less than 30,000 people, whose yearly pay-roll amounts to no less a sum than $20,000,000.

The growth of the telephone systems of the United States also furnishes us with statistics of an analogous nature, for we find that the average number of employees engaged in this industry is at least 140,000, whose annual earnings aggregate a minimum of $75,000,000; besides which the manufacturers of telephone apparatus employ over 12,000 persons, to whom is paid annually about $5,500,000.

No attempt is made to include figures of collateral industries, such, for instance, as copper, which is very closely allied with the electrical arts, and the great bulk of which is refined electrically.

The 8000 or so motion-picture theatres of the country employ no fewer than 40,000 people, whose aggregate annual income amounts to not less than $37,000,000.

Coming now to the Orange Valley plant, we take a drop from these figures to the comparatively modest ones which give us an average of 3600 employees and calling for an annual pay-roll of about $2,250,000. It must be remembered, however, that the sums mentioned above represent industries operated by great aggregations of capital, while the Orange Valley plant, as well as the Edison Portland Cement Company, with an average daily number of 530 employees and over $400,000 annual pay-roll, represent in a large measure industries that are more in the nature of closely held enterprises and practically under the direction of one mind.

The table herewith given summarizes the figures that have just been presented, and affords an idea of the totals affected by the genius of this one man. It is well known that many other men and many other inventions have been needed for the perfection of these arts; but it is equally true that, as already noted, some of these industries are directly the creation of Edison, while in every one of the rest his impress has been deep and significant. Before he began inventing, only two of them were known at all as arts—telegraphy and the manufacture of cement.

Moreover, these figures deal only with the United States, and take no account of the development of many of the Edison inventions in Europe or of their adoption throughout the world at large. Let it suffice

STATISTICAL RESUME (APPROXIMATE) OF SOME OF THE INDUSTRIES IN THE UNITED STATES DIRECTLY FOUNDED UPON OR AFFECTED BY INVENTIONS OF THOMAS A. EDISON

Class of Industry	Investment	Annual Gross Revenue or Sales	Number of Employees	Annual Pay-Rolls
Central station lighting and power	$1,000,000,000	$225,000,000	50,000	$40,000,000
Isolated incandescent lighting	500,000,000	—	33,000	17,000,000
Incandescent lamps	25,000,000	20,000,000	14,000	8,000,000
Electric fixtures	8,000,000	5,000,000	6,000	3,750,000
Dynamos and motors	60,000,000	50,000,000	30,000	20,000,000
Electric railways	4,000,000,000	430,000,000	250,000	155,000,000
Telephone systems	800,000,000	175,000,000	140,000	75,000,000
Telephone apparatus	30,000,000	15,000,000	12,000	5,500,000
Phonograph and motion pictures	10,000,000	15,000,000	5,000	6,000,000
Motion-picture theatres	40,000,000	80,000,000	40,000	37,000,000
Edison Portland cement	4,000,000	2,000,000	530	400,000
Telegraphy	250,000,000	60,000,000	100,000	30,000,000
Totals	6,727,000,000	1,077,000,000	680,530	397,650,000

that in America alone the work of Edison has been one of the most potent factors in bringing into existence new industries now capitalized at nearly $7,000,000,000, earning annually over $1,000,000,000, and giving employment to an army of more than six hundred thousand people.

A single diamond, prismatically flashing from its many facets the beauties of reflected light, comes well within the limits of comprehension of the human mind and appeals to appreciation by the finer sensibilities; but in viewing an exhibition of thousands of these beautiful gems, the eye and brain are simply bewildered with the richness of a display which tends

to confuse the intellect until the function of analysis comes into play and leads to more adequate apprehension.

So, in presenting the mass of statistics contained in this chapter, we fear that the result may have been the bewilderment of the reader to some extent. Nevertheless, in writing a biography of Edison, the main object is to present the facts as they are, and leave it to the intelligent reader to classify, apply, and analyze them in such manner as appeals most forcibly to his intellectual processes. If in the foregoing pages there has appeared to be a tendency to attribute to Edison the entire credit for the growth to which many of the above-named great enterprises have in these latter days attained, we must especially disclaim any intention of giving rise to such a deduction. No one who has carefully followed the course of this narrative can deny, however, that Edison is the father of some of the arts and industries that have been mentioned, and that as to some of the others it was the magic of his touch that helped make them practicable. Not only to his work and ingenuity is due the present magnitude of these arts and industries, but it is attributable also to the splendid work and numerous contributions of other great inventors, such as Brush, Bell, Elihu Thomson, Weston, Sprague, and many others, as well as to the financiers and investors who in the past thirty years have furnished the vast sums of money that were necessary to exploit and push forward these enterprises.

The reader may have noticed in a perusal of this chapter the lack of autobiographical quotations, such

as have appeared in other parts of this narrative. Edison's modesty has allowed us but one remark on the subject. This was made by him to one of the writers a short time ago, when, after an interesting indulgence in reminiscences of old times and early inventions, he leaned back in his chair, and with a broad smile on his face, said, reflectively: "Say, I *have* been mixed up in a whole lot of things,

CHAPTER XXVIII

THE BLACK FLAG

THROUGHOUT the forty-odd years of his creative life, Edison has realized by costly experience the truth of the cynical proverb that "A patent is merely a title to a lawsuit." It is not intended, however, by this statement to lead to any inference on the part of the reader that *he* stands peculiarly alone in any such experience, for it has been and still is the common lot of every successful inventor, sooner or later.

To attribute dishonesty or cupidity as the root of the defence in all patent litigation would be aiming very wide of the mark, for in no class of suits that come before the courts are there any that present a greater variety of complex, finely shaded questions, or that require more delicacy of interpretation, than those that involve the construction of patents, particularly those relating to electrical devices. Indeed, a careful study of legal procedure of this character could not be carried far without discovery of the fact that in numerous instances the differences of opinion between litigants were marked by the utmost *bona fides*.

On the other hand, such study would reveal many cases of undoubted fraudulent intent, as well as many

bold attempts to deprive the inventor of the fruits of his endeavors by those who have sought to evade, through subtle technicalities of the law, the penalty justly due them for trickery, evasion, or open contempt of the rights of others.

In the history of science and of the arts to which the world has owed its continued progress from year to year there is disclosed one remarkable fact, and that is, that whenever any important discovery or invention has been made and announced by one man, it has almost always been disclosed later that other men —possibly widely separated and knowing nothing of the other's work—have been following up the same general lines of investigation, independently, with the same object in mind. Their respective methods might be dissimilar while tending to the same end, but it does not necessarily follow that any one of these other experimenters might ever have achieved the result aimed at, although, after the proclamation of success by one, it is easy to believe that each of the other independent investigators might readily persuade himself that he would ultimately have reached the goal in just that same way.

This peculiar coincidence of simultaneous but separate work not only comes to light on the bringing out of great and important discoveries or inventions, but becomes more apparent if a new art is disclosed, for then the imagination of previous experimenters is stimulated through wide dissemination of the tidings, sometimes resulting in more or less effort to enter the newly opened field with devices or methods that resemble closely the original and fundamental

ones in principle and application. In this and other ways there arises constantly in the United States Patent Office a large number of contested cases, called "Interferences," where applications for patents covering the invention of a similar device have been independently filed by two or even more persons. In such cases only one patent can be issued, and that to the inventor who on the taking of testimony shows priority in date of invention.[1]"

In the opening up and development of any new art based upon a fundamental discovery or invention, there ensues naturally an era of supplemental or collateral inventive activity — the legitimate outcome of the basic original ideas. Part of this development may be due to the inventive skill and knowledge of the original inventor and his associates, who, by reason of prior investigation, would be in better position to follow up the art in its earliest details than others, who might be regarded as mere outsiders. Thus a new enterprise may be presented before the world by its promoters in the belief that they are strongly

[1] A most remarkable instance of contemporaneous invention, and without a parallel in the annals of the United States Patent Office, occurred when, on the same day, February 15, 1876, two separate descriptions were filed in that office, one a complete application and the other a caveat, but each covering an invention for "transmitting vocal sounds telegraphically." The application was made by Alexander Graham Bell, of Salem, Massachusetts, and the caveat by Elisha Gray, of Chicago, Illinois. On examination of the two papers it was found that both of them covered practically the same ground, hence, as only one patent could be granted, it became necessary to ascertain the precise hour at which the documents were respectively filed, and put the parties in interference. This was done, with the result that the patent was ultimately awarded to Bell.

fortified by patent rights which will protect them in a degree commensurate with the risks they have assumed.

Supplemental inventions, however, in any art, new or old, are not limited to those which emanate from the original workers, for the ingenuity of man, influenced by the spirit of the times, seizes upon any novel line of action and seeks to improve or enlarge upon it, or, at any rate, to produce more or less variation of its phases. Consequently, there is a constant endeavor on the part of a countless host of men possessing some degree of technical skill and inventive ability, to win fame and money by entering into the already opened fields of endeavor with devices and methods of their own, for which subsidiary patents may be obtainable. Some of such patents may prove to be valuable, while it is quite certain that in the natural order of things others will be commercially worthless, but none may be entirely disregarded in the history and development of the art.

It will be quite obvious, therefore, that the advent of any useful invention or discovery, great or small, is followed by a clashing of many interests which become complex in their interpretation by reason of the many conflicting claims that cluster around the main principle. Nor is the confusion less confounded through efforts made on the part of dishonest persons, who, like vultures, follow closely on the trail of successful inventors and (sometimes through information derived by underhand methods) obtain patents on alleged inventions, closely approximating

the real ones, solely for the purpose of harassing the original patentee until they are bought up, or else, with the intent of competing boldly in the new business, trust in the delays of legal proceedings to obtain a sure foothold in their questionable enterprise.

Then again there are still others who, having no patent rights, but waving aside all compunction and in downright fraud, simply enter the commercial field against the whole world, using ruthlessly whatever inventive skill and knowledge the original patentee may have disclosed, and trusting to the power of money, rapid movement, and mendacious advertising to build up a business which shall presently assume such formidable proportions as to force a compromise, or stave off an injunction until the patent has expired. In nine cases out of ten such a course can be followed with relative impunity; and guided by skilful experts who may suggest really trivial changes here and there over the patented structure, and with the aid of keen and able counsel, hardly a patent exists that could not be invaded by such infringers. Such is the condition of our laws and practice that the patentee in seeking to enforce his rights labors under a terrible handicap.

And, finally, in this recital of perplexing conditions confronting the inventor, there must not be forgotten the commercial "shark," whose predatory instincts are ever keenly alert for tender victims. In the wake of every newly developed art of world-wide importance there is sure to follow a number of unscrupulous adventurers, who hasten to take advantage of general public ignorance of the true inwardness of affairs.

Basing their operations on this lack of knowledge, and upon the tendency of human nature to give credence to widely advertised and high-sounding descriptions and specious promises of vast profits, these men find little difficulty in conjuring money out of the pockets of the unsophisticated and gullible, who rush to become stockholders in concerns that have "airy nothings" for a foundation, and that collapse quickly when the bubble is pricked.[1]

To one who is unacquainted with the trying circumstances attending the introduction and marketing of patented devices, it might seem unnecessary that an inventor and his business associates should be obliged to take into account the unlawful or ostensible competition of pirates or schemers, who, in the absence of legal decision, may run a free course for a long time. Nevertheless, as public patronage is the element vitally requisite for commercial success, and as the public is not usually in full possession of all the facts and therefore cannot discriminate between the genuine and the false, the legitimate inventor must avail himself of every possible means of proclaiming and asserting his rights if he desires to derive any benefit from the results of his skill and labor. Not only must he be prepared to fight in the Patent Office and pursue a regular course of patent litigation against those who may honestly deem themselves to

[1] A notable instance of the fleecing of unsuspecting and credulous persons occurred in the early eighties, during the furore occasioned by the introduction of Mr. Edison's electric-light system. A corporation claiming to have a self-generating dynamo (practically perpetual motion) advertised its preposterous claims extensively, and actually succeeded in selling a large amount of stock, which, of course, proved to be absolutely worthless.

be protected by other inventions or patents of similar character, and also proceed against more palpable infringers who are openly, defiantly, and illegitimately engaged in competitive business operations, but he must, as well, endeavor to protect himself against the assaults of impudent fraud by educating the public mind to a point of intelligent apprehension of the true status of his invention and the conflicting claims involved.

When the nature of a patent right is considered it is difficult to see why this should be so. The inventor creates a new thing—an invention of utility—and the people, represented by the Federal Government, say to him in effect: "Disclose your invention to us in a patent so that we may know how to practise it, and we will agree to give you a monopoly for seventeen years, after which we shall be free to use it. If the right thus granted is invaded, apply to a Federal Court and the infringer will be enjoined and required to settle in damages." Fair and false promise! Is it generally realized that no matter how flagrant the infringement nor how barefaced and impudent the infringer, no Federal Court will grant an injunction *until the patent shall have been first litigated to final hearing and sustained?* A procedure, it may be stated, requiring years of time and thousands of dollars, during which other infringers have generally entered the field, and all have grown fat.

Thus Edison and his business associates have been forced into a veritable maelstrom of litigation during the major part of the last forty years, in the effort to procure for themselves a small measure of protec-

tion for their interests under the numerous inventions of note that he has made at various times in that period. The earlier years of his inventive activity, while productive of many important contributions to electrical industries, such as stock tickers and printers, duplex, quadruplex, and automatic telegraphs, were not marked by the turmoil of interminable legal conflicts that arose after the beginning of the telephone and electric-light epochs. In fact, his inventions, up to and including his telephone improvements (which entered into already existing arts), had been mostly purchased by the Western Union and other companies, and while there was more or less contesting of his claims (especially in respect of the telephone), the extent of such litigation was not so conspicuously great as that which centred subsequently around his patents covering incandescent electric lighting and power systems.

Through these inventions there came into being an entirely new art, complete in its practicability evolved by Edison after protracted experiments founded upon most patient, thorough, and original methods of investigation extending over several years. Long before attaining the goal, he had realized with characteristic insight the underlying principles of the great and comprehensive problem he had started out to solve, and plodded steadily along the path that he had marked out, ignoring the almost universal scientific disbelief in his ultimate success. "Dreamer," "fool," "boaster" were among the appellations bestowed upon him by unbelieving critics. Ridicule was heaped upon him in the public prints, and mathematics were

called into service by learned men to settle the point forever that he was attempting the utterly impossible.

But, presto! no sooner had he accomplished the task and shown concrete results to the world than he found himself in the anomalous position of being at once surrounded by the conditions which inevitably confront every inventor. The path through the trackless forest had been blazed, and now every one could find the way. At the end of the road was a rich prize belonging rightfully to the man who had opened a way to it, but the struggles of others to reach it by more or less honest methods now began and continued for many years. If, as a former commissioner once said, "Edison was the man who kept the path to the Patent Office hot with his footsteps," there were other great inventors abreast or immediately on his heels, some, to be sure, with legitimate, original methods and vital improvements representing independent work; while there were also those who did not trouble to invent, but simply helped themselves to whatever ideas were available, and coming from any source.

Possibly events might have happened differently had Edison been able to prevent the announcement of his electric-light inventions until he was entirely prepared to bring out the system as a whole, ready for commercial exploitation, but the news of his production of a practical and successful incandescent lamp became known and spread like wild-fire to all corners of the globe. It took more than a year after the evolution of the lamp for Edison to get into position to do actual business, and during that time his

laboratory was the natural Mecca of every inquiring person. Small wonder, then, that when he was prepared to market his invention he should find others entering that market, at home and abroad, at the same time, and with substantially similar merchandise.

Edison narrates two incidents that may be taken as characteristic of a good deal that had to be contended with, coming in the shape of nefarious attack. "In the early days of my electric light," he says, "curiosity and interest brought a great many people to Menlo Park to see it. Some of them did not come with the best of intentions. I remember the visit of one expert, a well-known electrician, a graduate of Johns Hopkins University, and who then represented a Baltimore gas company. We had the lamps exhibited in a large room, and so arranged on a table as to illustrate the regular layout of circuits for houses and streets. Sixty of the men employed at the laboratory were used as watchers, each to keep an eye on a certain section of the exhibit, and see there was no monkeying with it. This man had a length of insulated No. 10 wire passing through his sleeves and around his back, so that his hands would conceal the ends and no one would know he had it. His idea, of course, was to put this wire across the ends of the supplying circuits, and short-circuit the whole thing—put it all out of business without being detected. Then he could report how easily the electric light went out, and a false impression would be conveyed to the public. He did not know that we had already worked out the safety-fuse, and that every

group of lights was thus protected independently. He put this jumper slyly in contact with the wires—and just four lamps went out on the section he tampered with. The watchers saw him do it, however, and got hold of him and just led him out of the place with language that made the recording angels jump for their typewriters."

The other incident is as follows: "Soon after I had got out the incandescent light I had an interference in the Patent Office with a man from Wisconsin. He filed an application for a patent and entered into a conspiracy to 'swear back' of the date of my invention, so as to deprive me of it. Detectives were put on the case, and we found he was a 'faker,' and we took means to break the thing up. Eugene Lewis, of Eaton & Lewis, had this in hand for me. Several years later this same man attempted to defraud a leading firm of manufacturing chemists in New York, and was sent to State prison. A short time after that a syndicate took up a man named Goebel and tried to do the same thing, but again our detective-work was too much for them. This was along the same line as the attempt of Drawbaugh to deprive Bell of his telephone. Whenever an invention of large prospective value comes out, these cases always occur. The lamp patent was sustained in the New York Federal Court. I thought that was final and would end the matter, but another Federal judge out in St. Louis did not sustain it. The result is I have never enjoyed any benefits from my lamp patents, although I fought for many years." The Goebel case will be referred to later in this chapter.

The original owner of the patents and inventions covering his electric-lighting system, the Edison Electric Light Company (in which Edison was largely interested as a stockholder), thus found at the outset that its commercial position was imperilled by the activity of competitors who had sprung up like mushrooms. It became necessary to take proper preliminary legal steps to protect the interests which had been acquired at the cost of so much money and such incessant toil and experiment. During the first few years in which the business of the introduction of the light was carried on with such strenuous and concentrated effort, the attention of Edison and his original associates was constantly focused upon the commercial exploitation and the further development of the system at home and abroad. The difficult and perplexing situation at that time is thus described by Major S. B. Eaton:

"The reason for the delay in beginning and pushing suits for infringements of the lamp patent has never been generally understood. In my official position as president of the Edison Electric Light Company I became the target, along with Mr. Edison, for censure from the stockholders and others on account of this delay, and I well remember how deep the feeling was. In view of the facts that a final injunction on the lamp patent was not obtained until the life of the patent was near its end, and, next, that no damages in money were ever paid by the guilty infringers, it has been generally believed that Mr. Edison sacrificed the interest of his stockholders selfishly when he delayed the prosecution of patent suits and

gave all his time and energies to manufacturing. This belief was the stronger because the manufacturing enterprises belonged personally to Mr. Edison and not to his company. But the facts render it easy to dispel this false belief. The Edison inventions were not only a lamp; they comprised also an entire system of central stations. Such a thing was new to the world, and the apparatus, as well as the manufacture thereof, was equally new. Boilers, engines, dynamos, motors, distribution mains, meters, house-wiring, safety-devices, lamps, and lamp-fixtures—all were vital parts of the whole system. Most of them were utterly novel and unknown to the arts, and all of them required quick, and, I may say, revolutionary thought and invention. The firm of Babcock & Wilcox gave aid on the boilers, Armington & Sims undertook the engines, but everything else was abnormal. No factories in the land would take up the manufacture. I remember, for instance, our interviews with Messrs. Mitchell, Vance & Co., the leading manufacturers of house gas-lighting fixtures, such as brackets and chandeliers. They had no faith in electric lighting, and rejected all our overtures to induce them to take up the new business of making electric-light fixtures. As regards other parts of the Edison system, notably the Edison dynamo, no such machines had ever existed; there was no factory in the world equipped to make them, and, most discouraging of all, the very scientific principles of their construction were still vague and experimental.

"What was to be done? Mr. Edison has never been greater than when he met and solved this crisis.

'If there are no factories,' he said, 'to make my inventions, I will build the factories myself. Since capital is timid, I will raise and supply it. The issue is factories or death.' Mr. Edison invited the cooperation of his leading stockholders. They lacked confidence or did not care to increase their investments. He was forced to go on alone. The chain of Edison shops was then created. By far the most perplexing of these new manufacturing problems was the lamp. Not only was it a new industry, one without shadow of prototype, but the mechanical devices for making the lamps, and to some extent the very machines to make those devices, were to be invented. All of this was done by the courage, capital, and invincible energy and genius of the great inventor. But Mr. Edison could not create these great and diverse industries and at the same time give requisite attention to litigation. He could not start and develop the new and hard business of electric lighting and yet spare one hour to pursue infringers. One thing or the other must wait. All agreed that it must be the litigation. And right there a lasting blow was given to the prestige of the Edison patents. The delay was translated as meaning lack of confidence; and the alert infringer grew strong in courage and capital. Moreover, and what was the heaviest blow of all, he had time, thus unmolested, to get a good start.

"In looking back on those days and scrutinizing them through the years, I am impressed by the greatness, the solitary greatness I may say, of Mr. Edison. We all felt then that we were of importance, and that

our contribution of effort and zeal were vital. I can see now, however, that the best of us was nothing but the fly on the wheel. Suppose anything had happened to Edison? All would have been chaos and ruin. To him, therefore, be the glory, if not the profit."

The foregoing remarks of Major Eaton show authoritatively how the much-discussed delay in litigating the Edison patents was so greatly misunderstood at the time, and also how imperatively necessary it was for Edison and his associates to devote their entire time and energies to the commercial development of the art. As the lighting business increased, however, and a great number of additional men were initiated into its mysteries, Edison and his experts were able to spare some time to legal matters, and an era of active patent litigation against infringers was opened about the year 1885 by the Edison company, and thereafter continued for many years.

While the history of this vast array of legal proceedings possesses a fascinating interest for those involved, as well as for professional men, legal and scientific, it could not be expected that it would excite any such feeling on the part of a casual reader. Hence, it is not proposed to encumber this narrative with any detailed record of the numerous suits that were brought and conducted through their complicated ramifications by eminent counsel. Suffice it to say that within about sixteen years after the commencement of active patent litigation, there had been spent by the owners of the Edison lighting patents upward of two million dollars in prosecuting more than two hundred lawsuits brought against persons who were

infringing many of the patents of Edison on the incandescent electric lamp and component parts of his system. Over fifty separate patents were involved in these suits, including the basic one on the lamp (ordinarily called the "Filament" patent), other detail lamp patents, as well as those on sockets, switches, dynamos, motors, and distributing systems.

The principal, or "test," suit on the "Filament" patent was that brought against "The United States Electric Lighting Company," which became a *cause celebre* in the annals of American jurisprudence. Edison's claims were strenuously and stubbornly contested throughout a series of intense legal conflicts that raged in the courts for a great many years. Both sides of the controversy were represented by legal talent of the highest order, under whose examination and cross-examination volumes of testimony were taken, until the printed record (including exhibits) amounted to more than six thousand pages. Scientific and technical literature and records in all parts of the civilized world were subjected to the most minute scrutiny of opposing experts in the endeavor to prove Edison to be merely an adapter of methods and devices already projected or suggested by others. The world was ransacked for anything that might be claimed as an anticipation of what he had done. Every conceivable phase of ingenuity that could be devised by technical experts was exercised in the attempt to show that Edison had accomplished nothing new. Everything that legal acumen could suggest—every subtle technicality of the law—all the complicated variations of phraseology that the novel

nomenclature of a young art would allow—all were pressed into service and availed of by the contestors of the Edison invention in their desperate effort to defeat his claims. It was all in vain, however, for the decision of the court was in favor of Edison, and his lamp patent was sustained not only by the tribunal of the first resort, but also by the Appellate Court some time afterward.

The first trial was had before Judge Wallace in the United States Circuit Court for the Southern District of New York, and the appeal was heard by Judges Lacombe and Shipman, of the United States Circuit Court of Appeals. Before both tribunals the cause had been fully represented by counsel chosen from among the most eminent representatives of the bar at that time, those representing the Edison interests being the late Clarence A. Seward and Grosvenor P. Lowrey, together with Sherburne Blake Eaton, Albert H. Walker, and Richard N. Dyer. The presentation of the case to the courts had in both instances been marked by masterly and able arguments, elucidated by experiments and demonstrations to educate the judges on technical points. Some appreciation of the magnitude of this case may be gained from the fact that the argument on its first trial employed a great many days, and the minutes covered hundreds of pages of closely typewritten matter, while the argument on appeal required eight days, and was set forth in eight hundred and fifty pages of typewriting. Eliminating all purely forensic eloquence and *exparte* statements, the addresses of counsel in this celebrated suit are worthy of deep study by an earnest

student, for, taken together, they comprise the most concise, authentic, and complete history of the prior state of the art and the development of the incandescent lamp that had been made up to that time.[1]

[1] The argument on appeal was conducted with the dignity and decorum that characterize such a proceeding in that court. There is usually little that savors of humor in the ordinary conduct of a case of this kind, but in the present instance a pertinent story was related by Mr. Lowrey, and it is now reproduced. In the course of his address to the court, Mr. Lowrey said:

"I have to mention the name of one expert whose testimony will, I believe, be found as accurate, as sincere, as straightforward as if it were the preaching of the gospel. I do it with great pleasure, and I ask you to read the testimony of Charles L. Clarke along with that of Thomas A. Edison. He had rather a hard row to hoe. He is a young gentleman; he is a very well-instructed man in his profession; he is not what I have called in the argument below an expert in the art of testifying, like some of the others; he has not yet become expert; what he may descend to later cannot be known; he entered upon his first experience, I think, with my brother Duncan, who is no trifler when he comes to deal with these questions, and for several months Mr. Clarke was pursued up and down, over a range of suggestions of what he would have thought if he had thought something else had been said at some time when something else was not said."

Mr. Duncan—"I got three pages a day out of him, too."

Mr. Lowrey—"Well, it was a good result. It always recalled to me what I venture now, since my friend breaks in upon me in this rude manner, to tell the court as well illustrative of what happened there. It is the story of the pickerel and the roach. My friend, Professor Von Reisenberg, of the University of Ghent, pursued a series of investigations into the capacity of various animals to receive ideas. Among the rest he put a pickerel into a tank containing water, and separated across its middle by a transparent glass plate, and on the other side he put a red roach. Now your Honors both know how a pickerel loves a red roach, and I have no doubt you will remember that he is a fish of a very low forehead and an unlimited appetite. When this pickerel saw the red roach through the glass, he made one of those awful dashes which is usually the ruin of whatever stands in its way; but he didn't reach the red roach. He received an impression, doubtless. It was not sufficient, however, to discourage him, and he

Owing to long-protracted delays incident to the taking of testimony and preparation for trial, the argument before the United States Circuit Court of Appeals was not had until the late spring of 1892, and its decision in favor of the Edison Lamp patent was filed on October 4, 1892, *more than twelve years after the issuance of the patent itself.*

As the term of the patent had been limited under the law, because certain foreign patents had been issued to Edison before that in this country, there was now but a short time left for enjoyment of the exclusive rights contemplated by the statute and granted to Edison and his assigns by the terms of the patent itself. A vigorous and aggressive legal

immediately tried again, and he continued to try for three-quarters of an hour. At the end of three-quarters of an hour he seemed a little shaken and discouraged, and stopped, and the red roach was taken out for that day and the pickerel left. On the succeeding day the red roach was restored, and the pickerel had forgotten the impressions of the first day, and he repeated this again. At the end of the second day the roach was taken out. This was continued, not through so long a period as the effort to take my friend Clarke and devour him, but for a period of about three weeks. At the end of the three weeks, the time during which the pickerel persisted each day had been shortened and shortened, until it was at last discovered that he didn't try at all. The plate glass was then removed, and the pickerel and the red roach sailed around together in perfect peace ever afterward. The pickerel doubtless attributed to the roach all this shaking, the rebuff which he had received. And that is about the condition in which my brother Duncan and my friend Clarke were at the end of this examination."

Mr. Duncan—"I notice on the redirect that Mr. Clarke changed his color."

Mr. Lowrey—"Well, perhaps he was a different kind of a roach then; but you didn't succeed in taking him.

"I beg your Honors to read the testimony of Mr. Clarke in the light of the anecdote of the pickerel and the roach."

campaign was therefore inaugurated by the Edison Electric Light Company against the numerous infringing companies and individuals that had sprung up while the main suit was pending. Old suits were revived and new ones instituted. Injunctions were obtained against many old offenders, and it seemed as though the Edison interests were about to come into their own for the brief unexpired term of the fundamental patent, when a new bombshell was dropped into the Edison camp in the shape of an alleged anticipation of the invention forty years previously by one Henry Goebel. Thus, in 1893, the litigation was reopened, and a protracted series of stubbornly contested conflicts was fought in the courts.

Goebel's claims were not unknown to the Edison Company, for as far back as 1882 they had been officially brought to its notice coupled with an offer of sale for a few thousand dollars. A very brief examination into their merits, however, sufficed to demonstrate most emphatically that Goebel had never made a practical incandescent lamp, nor had he ever contributed a single idea or device bearing, remotely or directly, on the development of the art. Edison and his company, therefore, rejected the offer unconditionally and declined to enter into any arrangements whatever with Goebel. During the prosecution of the suits in 1893 it transpired that the Goebel claims had also been investigated by the counsel of the defendant company in the principal litigation already related, but although every conceivable defence and anticipation had been dragged into the case

during the many years of its progress, the alleged Goebel anticipation was not even touched upon therein. From this fact it is quite apparent that they placed no credence on its *bona fides*.

But desperate cases call for desperate remedies. Some of the infringing lamp-manufacturing concerns, which during the long litigation had grown strong and lusty, and thus far had not been enjoined by the court, now saw injunctions staring them in the face, and in desperation set up the Goebel so-called anticipation as a defence in the suits brought against them.

This German watchmaker, Goebel, located in the East Side of New York City, had undoubtedly been interested, in a desultory kind of way, in simple physical phenomena, and a few trifling experiments made by him some forty or forty-five years previously were magnified and distorted into brilliant and all-comprehensive discoveries and inventions. Avalanches of affidavits of himself, "his sisters and his cousins and his aunts," practically all persons in ordinary walks of life, and of old friends, contributed a host of recollections that seemed little short of miraculous in their detailed accounts of events of a scientific nature that were said to have occurred so many years before. According to affidavits of Goebel himself and some of his family, nothing that would anticipate Edison's claim had been omitted from his work, for he (Goebel) claimed to have employed the all-glass globe, into which were sealed platinum wires carrying a tenuous carbon filament, from which the occluded gases had been liberated during the process

of high exhaustion. He had even determined upon bamboo as the best material for filaments. On the face of it he was seemingly gifted with more than human prescience, for in at least one of his exhibit lamps, said to have been made twenty years previously, he claimed to have employed processes which Edison and his associates had only developed by several years of experience in making thousands of lamps!

The Goebel story was told by the affidavits in an ingenuous manner, with a wealth of simple homely detail that carried on its face an appearance of truth calculated to deceive the elect, had not the elect been somewhat prepared by their investigation made some eleven years before.

The story was met by the Edison interests with counter-affidavits, showing its utter improbabilities and absurdities from the standpoint of men of science and others versed in the history and practice of the art; also affidavits of other acquaintances and neighbors of Goebel flatly denying the exhibitions he claimed to have made. The issue thus being joined, the legal battle raged over different sections of the country. A number of contumeliously defiant infringers in various cities based fond hopes of immunity upon the success of this Goebel evidence, but were defeated. The attitude of the courts is well represented in the opinion of Judge Colt, rendered in a motion for injunction against the Beacon Vacuum Pump and Electrical Company. The defence alleged the Goebel anticipation, in support of which it offered in evidence four lamps, Nos. 1, 2, and 3 purporting to have been made before 1854, and No. 4 before

1872. After a very full review of the facts in the case, and a fair consideration of the defendants' affidavits, Judge Colt in his opinion goes on to say:

"It is extremely improbable that Henry Goebel constructed a practical incandescent lamp in 1854. This is manifest from the history of the art for the past fifty years, the electrical laws which since that time have been discovered as applicable to the incandescent lamp, the imperfect means which then existed for obtaining a vacuum, the high degree of skill necessary in the construction of all its parts, and the crude instruments with which Goebel worked.

"Whether Goebel made the fiddle-bow lamps, 1, 2, and 3, is not necessary to determine. The weight of evidence on this motion is in the direction that he made these lamp or lamps similar in general appearance, though it is manifest that few, if any, of the many witnesses who saw the Goebel lamp could form an accurate judgment of the size of the filament or burner. But assuming they were made, they do not anticipate the invention of Edison. At most they were experimental toys used to advertise his telescope, or to flash a light upon his clock, or to attract customers to his shop. They were crudely constructed, and their life was brief. They could not be used for domestic purposes. They were in no proper sense the practical commercial lamp of Edison. The literature of the art is full of better lamps, all of which are held not to anticipate the Edison patent.

"As for Lamp No. 4, I cannot but view it with suspicion. It presents a new appearance. The reason given for not introducing it before the hearing is unsatisfactory. This lamp, to my mind, envelops with a cloud of distrust the whole Goebel story. It is simply impossible under the circumstances to believe that a lamp so constructed could have been made by Goebel before 1872. Nothing in the evidence warrants such a sup-

position, and other things show it to be untrue. This lamp has a carbon filament, platinum leading-in wires, a good vacuum, and is well sealed and highly finished. It is said that this lamp shows no traces of mercury in the bulb because the mercury was distilled, but Goebel says nothing about distilled mercury in his first affidavit, and twice he speaks of the particles of mercury clinging to the inside of the chamber, and for that reason he constructed a Geissler pump after he moved to 468 Grand Street, which was in 1877. Again, if this lamp has been in his possession since before 1872, as he and his son swear, why was it not shown to Mr. Crosby, of the American Company, when he visited his shop in 1881 and was much interested in his lamps? Why was it not shown to Mr. Curtis, the leading counsel for the defendants in the New York cases, when he was asked to produce a lamp and promised to do so? Why did not his son take this lamp to Mr. Bull's office in 1892, when he took the old fiddle-bow lamps, 1, 2, and 3? Why did not his son take this lamp to Mr. Eaton's office in 1882, when he tried to negotiate the sale of his father's inventions to the Edison Company? A lamp so constructed and made before 1872 was worth a large sum of money to those interested in defeating the Edison patent like the American Company, and Goebel was not a rich man. Both he and one of his sons were employed in 1881 by the American Company. Why did he not show this lamp to McMahon when he called in the interest of the American Company and talked over the electrical matters? When Mr. Dreyer tried to organize a company in 1882, and procured an option from him of all his inventions relating to electric lighting for which $925 was paid, and when an old lamp of this kind was of vital consequence and would have insured a fortune, why was it not forthcoming? Mr. Dreyer asked Goebel to produce an old lamp, and was especially anxious to find one pending his negotiations with the Edison Company for the sale

of Goebel's inventions. Why did he not produce this lamp in his interviews with Bohm, of the American Company, or Moses, of the Edison Company, when it was for his interest to do so? The value of such an anticipation of the Edison lamp was made known to him. He was desirous of realizing upon his inventions. He was proud of his incandescent lamps, and was pleased to talk about them with anybody who would listen. Is it conceivable, under all these circumstances, that he should have had this all-important lamp in his possession from 1872 to 1893, and yet no one have heard of it or seen it except his son? It cannot be said that ignorance of the English language offers an excuse. He knew English very well, although Bohm and Dreyer conversed with him in German. His children spoke English. Neither his ignorance nor his simplicity prevented him from taking out three patents: the first in 1865 for a sewing-machine hemmer, and the last in 1882 for an improvement in incandescent lamps. If he made Lamp No. 4 previous to 1872, why was it not also patented?

"There are other circumstances which throw doubt on this alleged Goebel anticipation. The suit against the United States Electric Lighting Company was brought in the Southern District of New York in 1885. Large interests were at stake, and the main defence to the Edison patent was based on prior inventions. This Goebel claim was then investigated by the leading counsel for the defence, Mr. Curtis. It was further inquired into in 1892, in the case against the Sawyer-Man Company. It was brought to the attention and considered by the Edison Company in 1882. It was at that time known to the American Company, who hoped by this means to defeat the monopoly under the Edison patent. Dreyer tried to organize a company for its purchase. Young Goebel tried to sell it. It must have been known to hundreds of people. And now when the Edison Company, after years of litigation, leaving but a short time for the

patent to run, have obtained a final adjudication establishing its validity, this claim is again resurrected to defeat the operation of the judgment so obtained. A court in equity should not look with favor on such a defence. Upon the evidence here presented, I agree with the first impression of Mr. Curtis and with the opinion of Mr. Dickerson that whatever Goebel did must be considered as an abandoned experiment.

"It has often been laid down that a meritorious invention is not to be defeated by something which rests in speculation or experiment, or which is rudimentary or incomplete.

"The law requires not conjecture, but certainty. It is easy after an important invention has gone into public use for persons to come forward with claims that they invented the same thing years before, and to endeavor to establish this by the recollection of witnesses as to events long past. Such evidence is to be received with great caution, and the presumption of novelty arising from the grant of the patent is not to be overcome except upon clear and convincing proof.

"When the defendant company entered upon the manufacture of incandescent lamps in May, 1891, it well knew the consequences which must follow a favorable decision for the Edison Company in the New York case."

The injunction was granted.

Other courts took practically the same view of the Goebel story as was taken by Judge Colt, and the injunctions asked in behalf of the Edison interests were granted on all applications except one in St. Louis, Missouri, in proceedings instituted against a strong local concern of that city.

Thus, at the eleventh hour in the life of this important patent, after a long period of costly litigation, Edison and his associates were compelled to assume

the defensive against a claimant whose utterly baseless pretensions had already been thoroughly investigated and rejected years before by every interested party, and ultimately, on examination by the courts, pronounced legally untenable, if not indeed actually fraudulent. Irritating as it was to be forced into the position of combating a proposition so well known to be preposterous and insincere, there was nothing else to do but to fight this fabrication with all the strenuous and deadly earnestness that would have been brought to bear on a really meritorious defence. Not only did this Goebel episode divert for a long time the energies of the Edison interests from activities in other directions, but the cost of overcoming the extravagantly absurd claims ran up into hundreds of thousands of dollars.

Another quotation from Major Eaton is of interest in this connection:

"Now a word about the Goebel case. I took personal charge of running down this man and his pretensions in the section of the city where he lived and among his old neighbors. They were a typical East Side lot—ignorant, generally stupid, incapable of long memory, but ready to oblige a neighbor and to turn an easy dollar by putting a cross-mark at the bottom of a forthcoming friendly affidavit. I can say in all truth and justice that their testimony was utterly false, and that the lawyers who took it must have known it.

"The Goebel case emphasizes two defects in the court procedure in patent cases. One is that they may be spun out almost interminably, even, possibly,

to the end of the life of the patent; the other is that the judge who decides the case does not see the witnesses. That adverse decision at St. Louis would never have been made if the court could have seen the men who swore for Goebel. When I met Mr. F. P. Fish on his return from St. Louis, after he had argued the Edison side, he felt keenly that disadvantage, to say nothing of the hopeless difficulty of educating the court."

In the earliest days of the art, when it was apparent that incandescent lighting had come to stay, the Edison Company was a shining mark at which the shafts of the dishonest were aimed. Many there were who stood ready to furnish affidavits that they or some one else whom they controlled had really invented the lamp, but would obligingly withdraw and leave Edison in possession of the field on payment of money. Investigation of these cases, however, revealed invariably the purely fraudulent nature of all such offers, which were uniformly declined.

As the incandescent light began to advance rapidly in public favor, the immense proportions of the future market became sufficiently obvious to tempt unauthorized persons to enter the field and become manufacturers. When the lamp became a thoroughly established article it was not a difficult matter to copy it, especially when there were employees to be hired away at increased pay, and their knowledge utilized by the more unscrupulous of these new competitors. This is not conjecture but known to be a fact, and the practice continued many years, during which new lamp companies sprang up on every side.

Hence, it is not surprising that, on the whole, the Edison lamp litigation was not less remarkable for quantity than quality. Between eighty and ninety separate suits upon Edison's fundamental lamp and detail patents were brought in the courts of the United States and prosecuted to completion.

In passing it may be mentioned that in England, France, and Germany also the Edison fundamental lamp patent was stubbornly fought in the judicial arena, and his claim to be the first inventor of practical incandescent lighting was uniformly sustained in all those countries.

Infringement was not, however, confined to the lamp alone, but, in America, extended all along the line of Edison's patents relating to the production and distribution of electric light, including those on dynamos, motors, distributing systems, sockets, switches, and other details which he had from time to time invented. Consequently, in order to protect its interests at all points, the Edison Company had found it necessary to pursue a vigorous policy of instituting legal proceedings against the infringers of these various patents, and, in addition to the large number of suits on the lamp alone, not less than one hundred and twenty-five other separate actions, involving some fifty or more of Edison's principal electric-lighting patents, were brought against concerns which were wrongfully appropriating his ideas and actively competing with his companies in the market.

The ramifications of this litigation became so extensive and complex as to render it necessary to

institute a special bureau, or department, through which the immense detail could be systematically sifted, analyzed, and arranged in collaboration with the numerous experts and counsel responsible for the conduct of the various cases. This department was organized in 1889 by Major Eaton, who was at this time and for some years afterward its general counsel.

In the selection of the head of this department a man of methodical and analytical habit of mind was necessary, capable of clear reasoning, and at the same time one who had gained a thoroughly practical experience in electric light and power fields, and the choice fell upon Mr. W. J. Jenks, the manager of the Edison central station at Brockton, Massachusetts. He had resigned that position in 1885, and had spent the intervening period in exploiting the Edison municipal system of lighting, as well as taking an active part in various other branches of the Edison enterprises.

Thus, throughout the life of Edison's patents on electric light, power, and distribution, the interminable legal strife has continued from day to day, from year to year. Other inventors, some of them great and notable, have been coming into the field since the foundation of the art, patents have multiplied exceedingly, improvement has succeeded improvement, great companies have grown greater, new concerns have come into existence, coalitions and mergers have taken place, all tending to produce changes in methods, but not much in diminution of patent litigation. While Edison has not for a long time past interested himself particularly in electric light

and power inventions, the bureau which was initiated under the old régime in 1889 still continues, enlarged in scope, directed by its original chief, but now conducted under the auspices of several allied companies whose great volumes of combined patents (including those of Edison) cover a very wide range of the electrical field.

As the general conception and theory of a lawsuit is the recovery of some material benefit, the lay mind is apt to conceive of great sums of money being awarded to a complainant by way of damages upon a favorable decision in an important patent case. It might, therefore, be natural to ask how far Edison or his companies have benefited pecuniarily by reason of the many belated victories they have scored in the courts. To this question a strict regard for truth compels the answer that they have not been benefited at all, not to the extent of a single dollar, so far as cash damages are concerned.

It is not to be denied, however, that substantial advantages have accrued to them more or less directly through the numerous favorable decisions obtained by them as a result of the enormous amount of litigation, in the prosecution of which so great a sum of money has been spent and so concentrated an amount of effort and time lavished. Indeed, it would be strange and unaccountable were the results otherwise. While the benefits derived were not directly pecuniary in their nature, they were such as tended to strengthen commercially the position of the rightful owners of the patents. Many irresponsible and purely piratical concerns were closed altogether;

others were compelled to take out royalty licenses; consolidations of large interests were brought about; the public was gradually educated to a more correct view of the true merits of conflicting claims, and, generally speaking, the business has been greatly unified and brought within well-defined and controllable lines.

Not only in relation to his electric light and power inventions has the progress of Edison and his associates been attended by legal controversy all through the years of their exploitation, but also in respect to other inventions, notably those relating to the phonograph and to motion pictures.

The increasing endeavors of infringers to divert into their own pockets some of the proceeds arising from the marketing of the devices covered by Edison's inventions on these latter lines, necessitated the institution by him, some years ago, of a legal department which, as in the case of the light inventions, was designed to consolidate all law and expert work and place it under the management of a general counsel. The department is of considerable extent, including a number of resident and other associate counsel, and a general office staff, all of whom are constantly engaged from day to day in patent litigation and other legal work necessary to protect the Edison interests. Through their labors the old story is reiterated in the contesting of approximate but conflicting claims, the never-ending effort to suppress infringement, and the destruction as far as possible of the commercial pirates who set sail upon the seas of all successful enterprises. The details, circumstances, and technical

questions are, of course, different from those relating to other classes of inventions, and although there has been no *cause celebre* concerning the phonograph and motion-picture patents, the contention is as sharp and strenuous as it was in the cases relating to electric lighting and heavy current technics.

Mr. Edison's storage battery and the poured cement house have not yet reached the stage of great commercial enterprises, and therefore have not yet risen to the dignity of patent litigation. If, however, the experience of past years is any criterion, there will probably come a time in the future when, despite present widely expressed incredulity and contemptuous sniffs of unbelief in the practicability of his ideas in these directions, ultimate success will give rise to a series of hotly contested legal conflicts such as have signalized the practical outcome of his past efforts in other lines.

When it is considered what Edison has done, what the sum and substance of his contributions to human comfort and happiness have been, the results, as measured by legal success, have been pitiable. With the exception of the favorable decision on the incandescent lamp filament patent, coming so late, however, that but little practical good was accomplished, the reader may search the law-books in vain for a single decision squarely and fairly sustaining a single patent of first order. There never was a monopoly in incandescent electric lighting, and even from the earliest days competitors and infringers were in the field reaping the benefits, and though defeated in the end, paying not a cent of tribute. The market was

practically as free and open as if no patent existed. There never was a monopoly in the phonograph; practically all of the vital inventions were deliberately appropriated by others, and the inventor was laughed at for his pains. Even so beautiful a process as that for the duplication of phonograph records was solemnly held by a Federal judge as lacking invention—as being obvious to any one. The mere fact that Edison spent years of his life in developing that process counted for nothing.

The invention of the three-wire system, which, when it was first announced as saving over 60 per cent. of copper in the circuits, was regarded as an utter impossibility—this patent was likewise held by a Federal judge to be lacking in invention. In the motion-picture art, infringements began with its very birth, and before the inevitable litigation could be terminated no less than ten competitors were in the field, with whom compromises had to be made.

In a foreign country, Edison would have undoubtedly received signal honors; in his own country he has won the respect and admiration of millions; but in his chosen field as an inventor and as a patentee his reward has been empty. The courts abroad have considered his patents in a liberal spirit and given him his due; the decisions in this country have fallen wide of the mark. We make no criticism of our Federal judges; as a body they are fair, able, and hard-working; but they operate under a system of procedure that stifles absolutely the development of inventive genius.

Until that system is changed and an opportunity

offered for a final, swift, and economical adjudication of patent rights, American inventors may well hesitate before openly disclosing their inventions to the public, and may seriously consider the advisability of retaining them as "trade secrets."

CHAPTER XXIX

THE SOCIAL SIDE OF EDISON

THE title of this chapter might imply that there is an unsocial side to Edison. In a sense this is true, for no one is more impatient or intolerant of interruption when deeply engaged in some line of experiment. Then the caller, no matter how important or what his mission, is likely to realize his utter insignificance and be sent away without accomplishing his object. But, generally speaking, Edison is easy tolerance itself, with a peculiar weakness toward those who have the least right to make any demands on his time. Man is a social animal, and that describes Edison; but it does not describe accurately the inventor asking to be let alone.

Edison never sought Society; but "Society" has never ceased to seek him, and to-day, as ever, the pressure upon him to give up his work and receive honors, meet distinguished people, or attend public functions, is intense. Only two or three years ago, a flattering invitation came from one of the great English universities to receive a degree, but at that moment he was deep in experiments on his new storage battery, and nothing could budge him. He would not drop the work, and while highly appreciative of the proposed honor, let it go by rather than quit for a week or two

the stern drudgery of probing for the fact and the truth. Whether one approves or not, it is at least admirable stoicism, of which the world has too little. A similar instance is that of a visit paid to the laboratory by some one bringing a gold medal from a foreign society. It was a very hot day in summer, the visitor was in full social regalia of silk hat and frock-coat, and insisted that he could deliver the medal only into Edison's hands. At that moment Edison, stripped pretty nearly down to the buff, was at the very crisis of an important experiment, and refused absolutely to be interrupted. He had neither sought nor expected the medal; and if the delegate didn't care to leave it he could take it away. At last Edison was overpersuaded, and, all dirty and perspiring as he was, received the medal rather than cause the visitor to come again. On one occasion, receiving a medal in New York, Edison forgot it on the ferry-boat and left it behind him. A few years ago, when Edison had received the Albert medal of the Royal Society of Arts, one of the present authors called at the laboratory to see it. Nobody knew where it was; hours passed before it could be found; and when at last the accompanying letter was produced, it had an office date stamp right over the signature of the royal president. A visitor to the laboratory with one of these medallic awards asked Edison if he had any others. "Oh yes," he said, "I have a couple of quarts more up at the house!" All this sounds like lack of appreciation, but it is anything else than that. While in Paris, in 1889, he wore the decoration of the Legion of Honor whenever occasion required, but at all other

times turned the badge under his lapel "because he hated to have fellow-Americans think he was showing off." And any one who knows Edison will bear testimony to his utter absence of ostentation. It may be added that, in addition to the two quarts of medals up at the house, there will be found at Glenmont many other signal tokens of esteem and good-will—a beautiful cigar-case from the late Tsar of Russia, bronzes from the Government of Japan, steel trophies from Krupp, and a host of other mementos, to one of which he thus refers: "When the experiments with the light were going on at Menlo Park, Sarah Bernhardt came to America. One evening, Robert L. Cutting, of New York, brought her out to see the light. She was a terrific 'rubberneck.' She jumped all over the machinery, and I had one man especially to guard her dress. She wanted to know everything. She would speak in French, and Cutting would translate into English. She stayed there about an hour and a half. Bernhardt gave me two pictures, painted by herself, which she sent me from Paris."

Reference has already been made to the callers upon Edison; and to give simply the names of persons of distinction would fill many pages of this record. Some were mere consumers of time; others were gladly welcomed, like Lord Kelvin, the greatest physicist of the last century, with whom Edison was always in friendly communication. "The first time I saw Lord Kelvin, he came to my laboratory at Menlo Park in 1876." (He reported most favorably on Edison's automatic telegraph system at the Philadelphia Exposition of 1876.) "I was then experimenting with

sending eight messages simultaneously over a wire by means of synchronizing tuning-forks. 'I would take a wire with similar apparatus at both ends, and would throw it over on one set of instruments, take it away, and get it back so quickly that you would not miss it; thereby taking advantage of the rapidity of electricity to perform operations. On my local wire I got it to work very nicely. When Sir William Thomson (Kelvin) came in the room, he was introduced to me, and had a number of friends with him. He said: 'What have you here?' I told him briefly what it was. He then turned around, and to my great surprise explained the whole thing to his friends. Quite a different exhibition was given two weeks later by another well-known Englishman, also an electrician, who came in with his friends, and I was trying for two hours to explain it to him and failed."

After the introduction of the electric light, Edison was more than ever in demand socially, but he shunned functions like the plague, not only because of the serious interference with work, but because of his deafness. Some dinners he had to attend, but a man who ate little and heard less could derive practically no pleasure from them. "George Washington Childs was very anxious I should go down to Philadelphia to dine with him. I seldom went to dinners. He insisted I should go—that a special car would leave New York. It was for me to meet Mr. Joseph Chamberlain. We had the private car of Mr. Roberts, President of the Pennsylvania Railroad. We had one of those celebrated dinners that only Mr. Childs could give, and I heard speeches from Charles Francis Adams and dif-

ferent people. When I came back to the depot, Mr. Roberts was there, and insisted on carrying my satchel for me. I never could understand that."

Among the more distinguished visitors of the electric-lighting period was President Diaz, with whom Edison became quite intimate. "President Diaz, of Mexico, visited this country with Mrs. Diaz, a highly educated and beautiful woman. She spoke very good English. They both took a deep interest in all they saw. I don't know how it ever came about, as it is not in my line, but I seemed to be delegated to show them around. I took them to railroad buildings, electric-light plants, fire departments, and showed them a great variety of things. It lasted two days." Of another visit Edison says: "Sitting Bull and fifteen Sioux Indians came to Washington to see the Great Father, and then to New York, and went to the Goerck Street works. We could make some very good pyrotechnics there, so we determined to give the Indians a scare. But it didn't work. We had an arc there of a most terrifying character, but they never moved a muscle." Another episode at Goerck Street did not find the visitors quite so stoical. "In testing dynamos at Goerck Street we had a long flat belt running parallel with the floor, about four inches above it, and travelling four thousand feet a minute. One day one of the directors brought in three or four ladies to the works to see the new electric-light system. One of the ladies had a little poodle led by a string. The belt was running so smoothly and evenly, the poodle did not notice the difference between it and the floor, and got into the belt before we could do anything.

The dog was whirled around forty or fifty times, and a little flat piece of leather came out—and the ladies fainted."

A very interesting period, on the social side, was the visit paid by Edison and his family to Europe in 1889, when he had made a splendid exhibit of his inventions and apparatus at the great Paris Centennial Exposition of that year, to the extreme delight of the French, who welcomed him with open arms. The political sentiments that the Exposition celebrated were not such as to find general sympathy in monarchical Europe, so that the "crowned heads" were conspicuous by their absence. It was not, of course, by way of theatrical antithesis that Edison appeared in Paris at such a time. But the contrast was none the less striking and effective. It was felt that, after all, that which the great exposition exemplified at its best —the triumph of genius over matter, over ignorance, over superstition—met with its due recognition when Edison came to participate, and to felicitate a noble nation that could show so much in the victories of civilization and the arts, despite its long trials and its long struggle for liberty. It is no exaggeration to say that Edison was greeted with the enthusiastic homage of the whole French people. They could find no praise warm enough for the man who had "organized the echoes" and "tamed the lightning," and whose career was so picturesque with eventful and romantic development. In fact, for weeks together it seemed as though no Parisian paper was considered complete and up to date without an article on Edison. The exuberant wit and fancy of the feuilletonists

seized upon his various inventions evolving from them others of the most extraordinary nature with which to bedazzle and bewilder the reader. At the close of the Exposition Edison was created a Commander of the Legion of Honor. His own exhibit, made at a personal expense of over $100,000, covered several thousand square feet in the vast Machinery Hall, and was centred around a huge Edison lamp built of myriads of smaller lamps of the ordinary size. The great attraction, however, was the display of the perfected phonograph. Several instruments were provided, and every day, all day long, while the Exposition lasted, queues of eager visitors from every quarter of the globe were waiting to hear the little machine talk and sing and reproduce their own voices. Never before was such a collection of the languages of the world made. It was the first linguistic concourse since Babel times. We must let Edison tell the story of some of his experiences:

"At the Universal Exposition at Paris, in 1889, I made a personal exhibit covering about an acre. As I had no intention of offering to sell anything I was showing, and was pushing no companies, the whole exhibition was made for honor, and without any hope of profit. But the Paris newspapers came around and wanted pay for notices of it, which we promptly refused; whereupon there was rather a stormy time for a while, but nothing was published about it.

"While at the Exposition I visited the Opera-House. The President of France lent me his private box. The Opera-House was one of the first to be lighted by the incandescent lamp, and the managers took great

pleasure in showing me down through the labyrinth containing the wiring, dynamos, etc. When I came into the box, the orchestra played the 'Star-Spangled Banner,' and all the people in the house arose; whereupon I was very much embarrassed. After I had been an hour at the play, the manager came around and asked me to go underneath the stage, as they were putting on a ballet of 300 girls, the finest ballet in Europe. It seems there is a little hole on the stage with a hood over it, in which the prompter sits when opera is given. In this instance it was not occupied, and I was given the position in the prompter's seat, and saw the whole ballet at close range.

"The city of Paris gave me a dinner at the new Hôtel de Ville, which was also lighted with the Edison system. They had a very fine installation of machinery. As I could not understand or speak a word of French, I went to see our minister, Mr. Whitelaw Reid, and got him to send a deputy to answer for me, which he did, with my grateful thanks. Then the telephone company gave me a dinner, and the engineers of France; and I attended the dinner celebrating the fiftieth anniversary of the discovery of photography. Then they sent to Reid my decoration, and they tried to put a sash on me, but I could not stand for that. My wife had me wear the little red button, but when I saw Americans coming I would slip it out of my lapel, as I thought they would jolly me for wearing it."

Nor was this all. Edison naturally met many of the celebrities of France: "I visited the Eiffel Tower at the invitation of Eiffel. We went to the top, where

there was an extension and a small place in which was Eiffel's private office. In this was a piano. When my wife and I arrived at the top, we found that Gounod, the composer, was there. We stayed a couple of hours, and Gounod sang and played for us. We spent a day at Meudon, an old palace given by the government to Jansen, the astronomer. He occupied three rooms, and there were 300. He had the grand dining-room for his laboratory. He showed me a gyroscope he had got up which made the incredible number of 4000 revolutions in a second. A modification of this was afterward used on the French Atlantic lines for making an artificial horizon to take observations for position at sea. In connection with this a gentleman came to me a number of years afterward, and I got out a part of some plans for him. He wanted to make a gigantic gyroscope weighing several tons, to be run by an electric motor and put on a sailing ship. He wanted this gyroscope to keep a platform perfectly horizontal, no matter how rough the sea was. Upon this platform he was going to mount a telescope to observe an eclipse off the Gold Coast of Africa. But for some reason it was never completed.

"Pasteur invited me to come down to the Institute, and I went and had quite a chat with him. I saw a large number of persons being inoculated, and also the whole modus operandi, which was very interesting. I saw one beautiful boy about ten, the son of an English lord. His father was with him. He had been bitten in the face, and was taking the treatment. I said to Pasteur, 'Will he live?' 'No,' said he, 'the boy will be dead in six days. He was bitten too

near the top of the spinal column, and came too late!' "

Edison has no opinion to offer as an expert on art, but has his own standard of taste: "Of course I visited the Louvre and saw the Old Masters, which I could not enjoy. And I attended the Luxembourg, with modern masters, which I enjoyed greatly. To my mind, the Old Masters are not art, and I suspect that many others are of the same opinion; and that their value is in their scarcity and in the variety of men with lots of money." Somewhat akin to this is a shrewd comment on one feature of the Exposition: "I spent several days in the Exposition at Paris. I remember going to the exhibit of the Kimberley diamond mines, and they kindly permitted me to take diamonds from some of the blue earth which they were washing by machinery to exhibit the mine operations. I found several beautiful diamonds, but they seemed a little light weight to me when I was picking them out. They were diamonds for exhibition purposes—probably glass."

This did not altogether complete the European trip of 1889, for Edison wished to see Helmholtz. "After leaving Paris we went to Berlin. The French papers then came out and attacked me because I went to Germany; and said I was now going over to the enemy. I visited all the things of interest in Berlin; and then on my way home I went with Helmholtz and Siemens in a private compartment to the meeting of the German Association of Science at Heidelberg, and spent two days there. When I started from Berlin on the trip, I began to tell American stories. Siemens was

very fond of these stories and would laugh immensely at them, and could see the points and the humor, by his imagination; but Helmholtz could not see one of them. Siemens would quickly, in German, explain the point, but Helmholtz could not see it, although he understood English, which Siemens could speak. Still the explanations were made in German. I always wished I could have understood Siemens's explanations of the points of those stories. At Heidelberg, my assistant, Mr. Wangemann, an accomplished German-American, showed the phonograph before the Association."

Then came the trip from the Continent to England, of which this will certainly pass as a graphic picture: "When I crossed over to England I had heard a good deal about the terrors of the English Channel as regards seasickness. I had been over the ocean three times and did not know what seasickness was, so far as I was concerned myself. I was told that while a man might not get seasick on the ocean, if he met a good storm on the Channel it would do for him. When we arrived at Calais to cross over, everybody made for the restaurant. I did not care about eating, and did not go to the restaurant, but my family did. I walked out and tried to find the boat. Going along the dock I saw two small smokestacks sticking up, and looking down saw a little boat. 'Where is the steamer that goes across the Channel?' 'This is the boat.' There had been a storm in the North Sea that had carried away some of the boats on the German steamer, and it certainly looked awful tough outside. I said to the man: 'Will that boat live in that sea?'

'Oh yes,' he said, 'but we've had a bad storm.' So I made up my mind that perhaps I would get sick this time. The managing director of the English railroad owning this line was Forbes, who heard I was coming over, and placed the private saloon at my disposal. The moment my family got in the room with the French lady's maid and the rest, they commenced to get sick, so I felt pretty sure I was in for it. We started out of the little inlet and got into the Channel, and that boat went in seventeen directions simultaneously. I waited awhile to see what was going to occur, and then went into the smoking-compartment. Nobody was there. By-and-by the fun began. Sounds of all kinds and varieties were heard in every direction. They were all sick. There must have been 100 people aboard. I didn't see a single exception except the waiters and myself. I asked one of the waiters concerning the boat itself, and was taken to see the engineer, and went down to look at the engines, and saw the captain. But I kept mostly in the smoking-room. I was smoking a big cigar, and when a man looked in I would give a big puff, and every time they saw that they would go away and begin again. The English Channel is a holy terror, all right, but it didn't affect me. I must be out of balance."

While in Paris, Edison had met Sir John Pender, the English "cable king," and had received an invitation from him to make a visit to his country residence: "Sir John Pender, the master of the cable system of the world at that time, I met in Paris. I think he must have lived among a lot of people who were very

solemn, because I went out riding with him in the Bois de Boulogne and started in to tell him American stories. Although he was a Scotchman he laughed immoderately. He had the faculty of understanding and quickly seeing the point of the stories; and for three days after I could not get rid of him. Finally I made him a promise that I would go to his country house at Foot's Cray, near London. So I went there, and spent two or three days telling him stories.

"While at Foot's Cray, I met some of the backers of Ferranti, then putting up a gigantic alternating-current dynamo near London to send ten or fifteen thousand volts up into the main district of the city for electric lighting. I think Pender was interested. At any rate the people invited to dinner were very much interested, and they questioned me as to what I thought of the proposition. I said I hadn't any thought about it, and could not give any opinion until I saw it. So I was taken up to London to see the dynamo in course of construction and the methods employed; and they insisted I should give them some expression of my views. While I gave them my opinion, it was reluctantly; I did not want to do so. I thought that commercially the thing was too ambitious, that Ferranti's ideas were too big, just then; that he ought to have started a little smaller until he was sure. I understand that this installation was not commercially successful, as there were a great many troubles. But Ferranti had good ideas, and he was no small man."

Incidentally it may be noted here that during the same year (1889) the various manufacturing Edison

lighting interests in America were brought together, under the leadership of Mr. Henry Villard, and consolidated in the Edison General Electric Company with a capital of no less than $12,000,000 on an eight-per-cent.-dividend basis. The numerous Edison central stations all over the country represented much more than that sum, and made a splendid outlet for the product of the factories. A few years later came the consolidation with the Thomson-Houston interests in the General Electric Company, which under the brilliant and vigorous management of President C. A. Coffin has become one of the greatest manufacturing institutions of the country, with an output of apparatus reaching toward $75,000,000 annually. The net result of both financial operations was, however, to detach Edison from the special field of invention to which he had given so many of his most fruitful years; and to close very definitely that chapter of his life, leaving him free to develop other ideas and interests as set forth in these volumes.

It might appear strange on the surface, but one of the reasons that most influenced Edison to regrets in connection with the "big trade" of 1889 was that it separated him from his old friend and ally, Bergmann, who, on selling out, saw a great future for himself in Germany, went there, and realized it. Edison has always had an amused admiration for Bergmann, and his "social side" is often made evident by his love of telling stories about those days of struggle. Some of the stories were told for this volume. "Bergmann came to work for me as a boy," says Edison. "He started in on stock-quotation printers. As he was a

rapid workman and paid no attention to the clock, I took a fancy to him, and gave him piece-work. He contrived so many little tools to cheapen the work that he made lots of money. I even helped him get up tools until it occurred to me that this was too rapid a process of getting rid of my money, as I hadn't the heart to cut the price when it was originally fair. After a year or so, Bergmann got enough money to start a small shop in Wooster Street, New York, and it was at this shop that the first phonographs were made for sale. Then came the carbon telephone transmitter, a large number of which were made by Bergmann for the Western Union. Finally came the electric light. A dynamo was installed in Bergmann's shop to permit him to test the various small devices which he was then making for the system. He rented power from a Jew who owned the building. Power was supplied from a fifty-horse-power engine to other tenants on the several floors. Soon after the introduction of the big dynamo machine, the landlord appeared in the shop and insisted that Bergmann was using more power than he was paying for, and said that lately the belt on the engine was slipping and squealing. Bergmann maintained that he must be mistaken. The landlord kept going among his tenants and finally discovered the dynamo. 'Oh! Mr. Bergmann, now I know where my power goes to,' pointing to the dynamo. Bergmann gave him a withering look of scorn, and said, 'Come here and I will show you.' Throwing off the belt and disconnecting the wires, he spun the armature around by hand. 'There,' said Bergmann, 'you see it's not here that

you must look for your loss.' This satisfied the landlord, and he started off to his other tenants. He did not know that that machine, when the wires were connected, could stop his engine.

"Soon after, the business had grown so large that E. H. Johnson and I went in as partners, and Bergmann rented an immense factory building at the corner of Avenue B and East Seventeenth Street, New York, six stories high and covering a quarter of a block. Here were made all the small things used on the electric-lighting system, such as sockets, chandeliers, switches, meters, etc. In addition, stock tickers, telephones, telephone switchboards, and typewriters were made—the Hammond typewriters were perfected and made there. Over 1500 men were finally employed. This shop was very successful both scientifically and financially. Bergmann was a man of great executive ability and carried economy of manufacture to the limit. Among all the men I have had associated with me, he had the commercial instinct most highly developed."

One need not wonder at Edison's reminiscent remark that, "In any trade any of my 'boys' made with Bergmann he always got the best of them, no matter what it was. One time there was to be a convention of the managers of Edison illuminating companies at Chicago. There were a lot of representatives from the East, and a private car was hired. At Jersey City a poker game was started by one of the delegates. Bergmann was induced to enter the game. This was played right through to Chicago without any sleep, but the boys didn't mind that. I had gotten them

immune to it. Bergmann had won all the money, and when the porter came in and said 'Chicago,' Bergmann jumped up and said: 'What! Chicago! I thought it was only Philadelphia!' "

But perhaps this further story is a better indication of developed humor and shrewdness: "A man by the name of Epstein had been in the habit of buying brass chips and trimmings from the lathes, and in some way Bergmann found out that he had been cheated. This hurt his pride, and he determined to get even. One day Epstein appeared and said: 'Good-morning, Mr. Bergmann, have you any chips to-day?' 'No,' said Bergmann, 'I have none.' 'That's strange, Mr. Bergmann; won't you look?' No, he wouldn't look; he knew he had none. Finally Epstein was so persistent that Bergmann called an assistant and told him to go and see if he had any chips. He returned and said they had the largest and finest lot they ever had. Epstein went up to several boxes piled full of chips, and so heavy that he could not lift even one end of a box. 'Now, Mr. Bergmann,' said Epstein, 'how much for the lot?' 'Epstein,' said Bergmann, 'you have cheated me, and I will no longer sell by the lot, but will sell only by the pound.' No amount of argument would apparently change Bergmann's determination to sell by the pound, but finally Epstein got up to $250 for the lot, and Bergmann, appearing as if disgusted, accepted and made him count out the money. Then he said: 'Well, Epstein, good-bye, I've got to go down to Wall Street.' Epstein and his assistant then attempted to lift the boxes to carry them out, but couldn't; and then discovered that cal-

culations as to quantity had been thrown out because the boxes had all been screwed down to the floor and mostly filled with boards with a veneer of brass chips. He made such a scene that he had to be removed by the police. I met him several days afterward and he said he had forgiven Mr. Bergmann, as he was such a smart business man, and the scheme was so ingenious.

"One day as a joke I filled three or four sheets of foolscap paper with a jumble of figures and told Bergmann they were calculations showing the great loss of power from blowing the factory whistle. Bergmann thought it real, and never after that would he permit the whistle to blow."

Another glimpse of the "social side" is afforded in the following little series of pen-pictures of the same place and time: "I had my laboratory at the top of the Bergmann works, after moving from Menlo Park. The building was six stories high. My father came there when he was eighty years of age. The old man had powerful lungs. In fact, when I was examined by the Mutual Life Insurance Company, in 1873, my lung expansion was taken by the doctor, and the old gentleman was there at the time. He said to the doctor: 'I wish you would take my lung expansion, too.' The doctor took it, and his surprise was very great, as it was one of the largest on record. I think it was five and one-half inches. There were only three or four could beat it. Little Bergmann hadn't much lung power. The old man said to him, one day: 'Let's run up-stairs.' Bergmann agreed and ran up. When they got there Bergmann was all done up, but my father never showed a sign of it. There was an

elevator there, and each day while it was travelling up I held the stem of my Waterbury watch up against the column in the elevator shaft and it finished the winding by the time I got up the six stories." This original method of reducing the amount of physical labor involved in watch-winding brings to mind another instance of shrewdness mentioned by Edison, with regard to his newsboy days. Being asked whether he did not get imposed upon with bad bank-bills, he replied that he subscribed to a bank-note detector and consulted it closely whenever a note of any size fell into his hands. He was then less than fourteen years old.

The conversations with Edison that elicited these stories brought out some details as to peril that attends experimentation. He has confronted many a serious physical risk, and counts himself lucky to have come through without a scratch or scar. Four instances of personal danger may be noted in his own language: "When I started at Menlo, I had an electric furnace for welding rare metals that I did not know about very clearly. I was in the dark-room, where I had a lot of chloride of sulphur, a very corrosive liquid. I did not know that it would decompose by water. I poured in a beakerful of water, and the whole thing exploded and threw a lot of it into my eyes. I ran to the hydrant, leaned over backward, opened my eyes, and ran the hydrant water right into them. But it was two weeks before I could see.

"The next time we just saved ourselves. I was making some stuff to squirt into filaments for the incandescent lamp. I made about a pound of it. I

had used ammonia and bromine. I did not know it at the time, but I had made bromide of nitrogen. I put the large bulk of it in three filters, and after it had been washed and all the water had come through the filter, I opened the three filters and laid them on a hot steam plate to dry with the stuff. While I and Mr. Sadler, one of my assistants, were working near it, there was a sudden flash of light, and a very smart explosion. I said to Sadler: 'What is that?' 'I don't know,' he said, and we paid no attention. In about half a minute there was a sharp concussion, and Sadler said: 'See, it is that stuff on the steam plate.' I grabbed the whole thing and threw it in the sink, and poured water on it. I saved a little of it and found it was a terrific explosive. The reason why those little preliminary explosions took place was that a little had spattered out on the edge of the filter paper, and had dried first and exploded. Had the main body exploded there would have been nothing left of the laboratory I was working in.

"At another time, I had a briquetting machine for briquetting iron ore. I had a lever held down by a powerful spring, and a rod one inch in diameter and four feet long. While I was experimenting with it, and standing beside it, a washer broke, and that spring threw the rod right up to the ceiling with a blast; and it came down again just within an inch of my nose, and went clear through a two-inch plank. That was 'within an inch of your life,' as they say.

"In my experimental plant for concentrating iron ore in the northern part of New Jersey, we had a verti-

cal drier, a column about nine feet square and eighty feet high. At the bottom there was a space where two men could go through a hole; and then all the rest of the column was filled with baffle plates. One day this drier got blocked, and the ore would not run down. So I and the vice-president of the company, Mr. Mallory, crowded through the manhole to see why the ore would not come down. After we got in, the ore did come down and there were fourteen tons of it above us. The men outside knew we were in there, and they had a great time digging us out and getting air to us."

Such incidents brought out in narration the fact that many of the men working with him had been less fortunate, particularly those who had experimented with the Roentgen X-ray, whose ravages, like those of leprosy, were responsible for the mutilation and death of at least one expert assistant. In the early days of work on the incandescent lamp, also, there was considerable trouble with mercury. "I had a series of vacuum-pumps worked by mercury and used for exhausting experimental incandescent lamps. The main pipe, which was full of mercury, was about seven and one-half feet from the floor. Along the length of the pipe were outlets to which thick rubber tubing was connected, each tube to a pump. One day, while experimenting with the mercury pump, my assistant, an awkward country lad from a farm on Staten Island, who had adenoids in his nose and breathed through his mouth, which was always wide open, was looking up at this pipe, at a small leak of mercury, when the rubber tube came off and probably two pounds of

mercury went into his mouth and down his throat, and got through his system somehow. In a short time he became salivated, and his teeth got loose. He went home, and shortly his mother appeared at the laboratory with a horsewhip, which she proposed to use on the proprietor. I was fortunately absent, and she was mollified somehow by my other assistants. I had given the boy considerable iodide of potassium to prevent salivation, but it did no good in this case.

"When the first lamp-works were started at Menlo Park, one of my experiments seemed to show that hot mercury gave a better vacuum in the lamp than cold mercury. I thereupon started to heat it. Soon all the men got salivated, and things looked serious; but I found that in the mirror factories, where mercury was used extensively, the French Government made the giving of iodide of potassium compulsory to prevent salivation. I carried out this idea, and made every man take a dose every day, but there was great opposition, and hot mercury was finally abandoned."

It will have been gathered that Edison has owed his special immunity from "occupational diseases" not only to luck but to unusual powers of endurance, and a strong physique, inherited, no doubt, from his father. Mr. Mallory mentions a little fact that bears on this exceptional quality of bodily powers. "I have often been surprised at Edison's wonderful capacity for the instant visual perception of differences in materials that were invisible to others until he would patiently point them out. This had puzzled me for years, but one day I was unexpectedly let into part of the secret. For some little time past Mr. Edison had noticed that

he was bothered somewhat in reading print, and I asked him to have an oculist give him reading-glasses. He partially promised, but never took time to attend to it. One day he and I were in the city, and as Mrs. Edison had spoken to me about it, and as we happened to have an hour to spare, I persuaded him to go to an oculist with me. Using no names, I asked the latter to examine the gentleman's eyes. He did so very conscientiously, and it was an interesting experience, for he was kept busy answering Mr. Edison's numerous questions. When the oculist finished, he turned to me and said: "I have been many years in the business, but have never seen an optic nerve like that of this gentleman. An ordinary optic nerve is about the thickness of a thread, but his is like a cord. He must be a remarkable man in some walk of life. Who is he?"

It has certainly required great bodily vigor and physical capacity to sustain such fatigue as Edison has all his life imposed upon himself, to the extent on one occasion of going five days without sleep. In a conversation during 1909, he remarked, as though it were nothing out of the way, that up to seven years previously his average of daily working hours was nineteen and one-half, but that since then he figured it at eighteen. He said he stood it easily, because he was interested in everything, and was reading and studying all the time. For instance, he had gone to bed the night before exactly at twelve and had arisen at 4.30 A. M. to read some New York law reports. It was suggested that the secret of it might be that he did not live in the past, but was always looking for-

ward to a greater future, to which he replied: "Yes, that's it. I don't live with the past; I am living for to-day and to-morrow: I am interested in every department of science, arts, and manufacture. I read all the time on astronomy, chemistry, biology, physics, music, metaphysics, mechanics, and other branches—political economy, electricity, and, in fact, all things that are making for progress in the world. I get all the proceedings of the scientific societies, the principal scientific and trade journals, and read them. I also read *The Clipper*, *The Police Gazette*, *The Billboard*, *The Dramatic Mirror*, and a lot of similar publications, for I like to know what is going on. In this way I keep up to date, and live in a great moving world of my own, and, what's more, I enjoy every minute of it." Referring to some event of the past, he said: "Spilt milk doesn't interest me. I have spilt lots of it, and while I have always felt it for a few days, it is quickly forgotten, and I turn again to the future." During another talk on kindred affairs it was suggested to Edison that, as he had worked so hard all his life, it was about time for him to think somewhat of the pleasures of travel and the social side of life. To which he replied laughingly: "I already have a schedule worked out. From now until I am seventy-five years of age, I expect to keep more or less busy with my regular work, not, however, working as many hours or as hard as I have in the past. At seventy-five I expect to wear loud waistcoats with fancy buttons; also gaiter tops; at eighty I expect to learn how to play bridge whist and talk foolishly to the ladies. At eighty-five I expect to wear a full-dress suit every

evening at dinner, and at ninety—well, I never plan more than thirty years ahead."

The reference to clothes is interesting, as it is one of the few subjects in which Edison has no interest. It rather bores him. His dress is always of the plainest; in fact, so plain that, at the Bergmann shops in New York, the children attending a parochial Catholic school were wont to salute him with the finger to the head, every time he went by. Upon inquiring, he found that they took him for a priest, with his dark garb, smooth-shaven face, and serious expression. Edison says: "I get a suit that fits me; then I compel the tailors to use that as a jig or pattern or blue-print to make others by. For many years a suit was used as a measurement; once or twice they took fresh measurements, but these didn't fit and they had to go back. I eat to keep my weight constant, hence I need never change measurements." In regard to this, Mr. Mallory furnishes a bit of chat as follows: "In a lawsuit in which I was a witness, I went out to lunch with the lawyers on both sides, and the lawyer who had been cross-examining me stated that he had for a client a Fifth Avenue tailor, who had told him that he had made all of Mr. Edison's clothes for the last twenty years, and that he had never seen him. He said that some twenty years ago a suit was sent to him from Orange, and measurements were made from it, and that every suit since had been made from these measurements. I may add, from my own personal observation, that in Mr. Edison's clothes there is no evidence but that every new suit that he has worn in that time looks as if he had been specially measured

for it, which shows how very little he has changed physically in the last twenty years."

Edison has never had any taste for amusements, although he will indulge in the game of "Parchesi" and has a billiard-table in his house. The coming of the automobile was a great boon to him, because it gave him a form of outdoor sport in which he could indulge in a spirit of observation, without the guilty feeling that he was wasting valuable time. In his automobile he has made long tours, and with his family has particularly indulged his taste for botany. That he has had the usual experience in running machines will be evidenced by the following little story from Mr. Mallory: "About three years ago I had a motor-car of a make of which Mr. Edison had already two cars; and when the car was received I made inquiry as to whether any repair parts were carried by any of the various garages in Easton, Pennsylvania, near our cement works. I learned that this particular car was the only one in Easton. Knowing that Mr. Edison had had an experience lasting two or three years with this particular make of car, I determined to ask him for information relative to repair parts; so the next time I was at the laboratory I told him I was unable to get any repair parts in Easton, and that I wished to order some of the most necessary, so that, in case of breakdowns, I would not be compelled to lose the use of the car for several days until the parts came from the automobile factory. I asked his advice as to what I should order, to which he replied: 'I don't think it will be necessary to order an extra top.'" Since that episode, which will probably be

appreciated by most automobilists, Edison has taken up the electric automobile, and is now using it as well as developing it. One of the cars equipped with his battery is the Bailey, and Mr. Bee tells the following story in regard to it: "One day Colonel Bailey, of Amesbury, Massachusetts, who was visiting the Automobile Show in New York, came out to the laboratory to see Mr. Edison, as the latter had expressed a desire to talk with him on his next visit to the metropolis. When he arrived at the laboratory, Mr. Edison, who had been up all night experimenting, was asleep on the cot in the library. As a rule we never wake Mr. Edison from sleep, but as he wanted to see Colonel Bailey, who had to go, I felt that an exception should be made, so I went and tapped him on the shoulder. He awoke at once, smiling, jumped up, was instantly himself as usual, and advanced and greeted the visitor. His very first question was: 'Well, Colonel, how did you come out on that experiment?'—referring to some suggestions he had made at their last meeting a year before. For a minute Colonel Bailey did not recall what was referred to; but a few words from Mr. Edison brought it back to his remembrance, and he reported that the results had justified Mr. Edison's expectations."

It might be expected that Edison would have extreme and even radical ideas on the subject of education—and he has, as well as a perfect readiness to express them, because he considers that time is wasted on things that are not essential: "What we need," he has said, "are men capable of doing work. I wouldn't give a penny for the ordinary college grad-

uate, except those from the institutes of technology. Those coming up from the ranks are a darned sight better than the others. They aren't filled up with Latin, philosophy, and the rest of that ninny stuff." A further remark of his is: "What the country needs now is the practical skilled engineer, who is capable of doing everything. In three or four centuries, when the country is settled, and commercialism is diminished, there will be time for the literary men. At present we want engineers, industrial men, good business-like managers, and railroad men." It is hardly to be marvelled at that such views should elicit warm protest, summed up in the comment: "Mr. Edison and many like him see in reverse the course of human progress. Invention does not smooth the way for the practical men and make them possible. There is always too much danger of neglecting thoughts for things, ideas for machinery. No theory of education that aggravates this danger is consistent with national well-being."

Edison is slow to discuss the great mysteries of life, but is of reverential attitude of mind, and ever tolerant of others' beliefs. He is not a religious man in the sense of turning to forms and creeds, but, as might be expected, is inclined as an inventor and creator to argue from the basis of "design" and thence to infer a designer. "After years of watching the processes of nature," he says, "I can no more doubt the existence of an Intelligence that is running things than I do of the existence of myself. Take, for example, the substance water that forms the crystals known as ice. Now, there are hundreds of combinations that form

crystals, and every one of them, save ice, sinks in water. Ice, I say, doesn't, and it is rather lucky for us mortals, for if it had done so, we would all be dead. Why? Simply because if ice sank to the bottoms of rivers, lakes, and oceans as fast as it froze, those places would be frozen up and there would be no water left. That is only one example out of thousands that to me prove beyond the possibility of a doubt that some vast Intelligence is governing this and other planets."

A few words as to the domestic and personal side of Edison's life, to which many incidental references have already been made in these pages. He was married in 1873 to Miss Mary Stillwell, who died in 1884, leaving three children—Thomas Alva, William Leslie, and Marion Estelle.

Mr. Edison was married again in 1886 to Miss Mina Miller, daughter of Mr. Lewis Miller, a distinguished pioneer inventor and manufacturer in the field of agricultural machinery, and equally entitled to fame as the father of the "Chautauqua idea," and the founder with Bishop Vincent of the original Chautauqua, which now has so many replicas all over the country, and which started in motion one of the great modern educational and moral forces in America. By this marriage there are three children—Charles, Madeline, and Theodore.

For over a score of years, dating from his marriage to Miss Miller, Edison's happy and perfect domestic life has been spent at Glenmont, a beautiful property acquired at that time in Llewellyn Park, on the higher slopes of Orange Mountain, New Jersey, within easy

walking distance of the laboratory at the foot of the hill in West Orange. As noted already, the latter part of each winter is spent at Fort Myers, Florida, where Edison has, on the banks of the Calahoutchie River, a plantation home that is in many ways a miniature copy of the home and laboratory up North. Glenmont is a rather elaborate and florid building in Queen Anne English style, of brick, stone, and wooden beams showing on the exterior, with an abundance of gables and balconies. It is set in an environment of woods and sweeps of lawn, flanked by unusually large conservatories, and always bright in summer with glowing flower beds. It would be difficult to imagine Edison in a stiffly formal house, and this big, cozy, three-story, rambling mansion has an easy freedom about it, without and within, quite in keeping with the genius of the inventor, but revealing at every turn traces of feminine taste and culture. The ground floor, consisting chiefly of broad drawing-rooms, parlors, and dining-hall, is chiefly noteworthy for the "den," or lounging-room, at the end of the main axis, where the family and friends are likely to be found in the evening hours, unless the party has withdrawn for more intimate social intercourse to the interesting and fascinating private library on the floor above. The lounging-room on the ground floor is more or less of an Edison museum, for it is littered with souvenirs from great people, and with mementos of travel, all related to some event or episode. A large cabinet contains awards, decorations, and medals presented to Edison, accumulating in the course of a long career, some of which

SOME OF THE MEDALS AND DECORATIONS AWARDED TO EDISON

may be seen in the illustration opposite. Near by may be noticed a bronze replica of the Edison gold medal which was founded in the American Institute of Electrical Engineers, the first award of which was made to Elihu Thomson during the present year (1910). There are statues of serpentine marble, gifts of the late Tsar of Russia, whose admiration is also represented by a gorgeous inlaid and enamelled cigar-case.

There are typical bronze vases from the Society of Engineers of Japan, and a striking desk-set of writing apparatus from Krupp, all the pieces being made out of tiny but massive guns and shells of Krupp steel. In addition to such bric-à-brac and bibelots of all kinds are many pictures and photographs, including the original sketches of the reception given to Edison in 1889 by the Paris *Figaro*, and a letter from Madame Carnot, placing the Presidential opera-box at the disposal of Mr. and Mrs. Edison. One of the most conspicuous features of the room is a phonograph equipment on which the latest and best productions by the greatest singers and musicians can always be heard, but which Edison himself is everlastingly experimenting with, under the incurable delusion that this domestic retreat is but an extension of his laboratory.

The big library—semi-boudoir—up-stairs is also very expressive of the home life of Edison, but again typical of his nature and disposition, for it is difficult to overlay his many technical books and scientific periodicals with a sufficiently thick crust of popular magazines or current literature to prevent their outcropping into evidence. In like manner the chat

and conversation here, however lightly it may begin, turns invariably to large questions and deep problems, especially in the fields of discovery and invention; and Edison, in an easy-chair, will sit through the long evenings till one or two in the morning, pulling meditatively at his eyebrows, quoting something he has just read pertinent to the discussion, hearing and telling new stories with gusto, offering all kinds of ingenious suggestions, and without fail getting hold of pads and sheets of paper on which to make illustrative sketches. He is wonderfully handy with the pencil, and will sometimes amuse himself, while chatting, with making all kinds of fancy bits of penmanship, twisting his signature into circles and squares, but always writing straight lines—so straight they could not be ruled truer. Many a night it is a question of getting Edison to bed, for he would much rather probe a problem than eat or sleep; but at whatever hour the visitor retires or gets up, he is sure to find the master of the house on hand, serene and reposeful, and just as brisk at dawn as when he allowed the conversation to break up at midnight. The ordinary routine of daily family life is of course often interrupted by receptions and parties, visits to the billiard-room, the entertainment of visitors, the departure to and return from college, at vacation periods, of the young people, and matters relating to the many social and philanthropic causes in which Mrs. Edison is actively interested; but, as a matter of fact, Edison's round of toil and relaxation is singularly uniform and free from agitation, and that is the way he would rather have it.

Edison at sixty-three has a fine physique, and being free from serious ailments of any kind, should carry on the traditions of his long-lived ancestors as to a vigorous old age. His hair has whitened, but is still thick and abundant, and though he uses glasses for certain work, his gray-blue eyes are as keen and bright and deeply lustrous as ever, with the direct, searching look in them that they have ever worn. He stands five feet nine and one-half inches high, weighs one hundred and seventy-five pounds, and has not varied as to weight in a quarter of a century, although as a young man he was slim to gauntness. He is very abstemious, hardly ever touching alcohol, caring little for meat, but fond of fruit, and never averse to a strong cup of coffee or a good cigar. He takes extremely little exercise, although his good color and quickness of step would suggest to those who do not know better that he is in the best of training, and one who lives in the open air.

His simplicity as to clothes has already been described. One would be startled to see him with a bright tie, a loud checked suit, or a fancy waistcoat, and yet there is a curious sense of fastidiousness about the plain things he delights in. Perhaps he is not wholly responsible personally for this state of affairs. In conversation Edison is direct, courteous, ready to discuss a topic with anybody worth talking to, and, in spite of his sore deafness, an excellent listener. No one ever goes away from Edison in doubt as to what he thinks or means, but he is ever shy and diffident to a degree if the talk turns on himself rather than on his work.

If the authors were asked, after having written the foregoing pages, to explain here the reason for Edison's success, based upon their observations so far made, they would first answer that he combines with a vigorous and normal physical structure a mind capable of clear and logical thinking, and an imagination of unusual activity. But this would by no means offer a complete explanation. There are many men of equal bodily and mental vigor who have not achieved a tithe of his accomplishment. What other factors are there to be taken into consideration to explain this phenomenon? First, a stolid, almost phlegmatic, nervous system which takes absolutely no notice of ennui—a system like that of a Chinese ivory-carver who works day after day and month after month on a piece of material no larger than your hand. No better illustration of this characteristic can be found than in the development of the nickel pocket for the storage battery, an element the size of a short lead-pencil, on which upward of five years were spent in experiments, costing over a million dollars, day after day, always apparently with the same tubes but with small variations carefully tabulated in the note-books. To an ordinary person the mere sight of such a tube would have been as distasteful, certainly after a week or so, as the smell of a quail to a man striving to eat one every day for a month, near the end of his gastronomic ordeal. But to Edison these small perforated steel tubes held out as much of a fascination at the end of five years as when the search was first begun, and every morning found him as eager to begin the investigation anew as if the battery was an absolutely

MR. EDISON AND PROFESSOR STEINMETZ IN CONVERSATION—BRIARCLIFF MANOR, SEPTEMBER 2, 1909

novel problem to which his thoughts had just been directed.

Another and second characteristic of Edison's personality contributing so strongly to his achievements is an intense, not to say courageous, optimism in which no thought of failure can enter, an optimism born of self-confidence, and becoming—after forty or fifty years of experience—more and more a sense of certainty in the accomplishment of success. In the overcoming of difficulties he has the same intellectual pleasure as the chess-master when confronted with a problem requiring all the efforts of his skill and experience to solve. To advance along smooth and pleasant paths, to encounter no obstacles, to wrestle with no difficulties and hardships—such has absolutely no fascination to him. He meets obstruction with the keen delight of a strong man battling with the waves and opposing them in sheer enjoyment, and the greater and more apparently overwhelming the forces that may tend to sweep him back, the more vigorous his own efforts to forge through them. At the conclusion of the ore-milling experiments, when practically his entire fortune was sunk in an enterprise that had to be considered an impossibility, when at the age of fifty he looked back upon five or six years of intense activity expended apparently for naught, when everything seemed most black and the financial clouds were quickly gathering on the horizon, not the slightest idea of repining entered his mind. The main experiment had succeeded—he had accomplished what he sought for. Nature at another point had outstripped him, yet he had broadened his own sum of knowledge

to a prodigious extent. It was only during the past summer (1910) that one of the writers spent a Sunday with him riding over the beautiful New Jersey roads in an automobile, Edison in the highest spirits and pointing out with the keenest enjoyment the many beautiful views of valley and wood. The wanderings led to the old ore-milling plant at Edison, now practically a mass of deserted buildings all going to decay. It was a depressing sight, marking such titanic but futile struggles with nature. To Edison, however, no trace of sentiment or regret occurred, and the whole ruins were apparently as much a matter of unconcern as if he were viewing the remains of Pompeii. Sitting on the porch of the White House, where he lived during that period, in the light of the setting sun, his fine face in repose, he looked as placidly over the scene as a happy farmer over a field of ripening corn. All that he said was: "I never felt better in my life than during the five years I worked here. Hard work, nothing to divert my thought, clear air and simple food made my life very pleasant. We learned a great deal. It will be of benefit to some one some time." Similarly, in connection with the storage battery, after having experimented continuously for three years, it was found to fall below his expectations, and its manufacture had to be stopped. Hundreds of thousands of dollars had been spent on the experiments, and, largely without Edison's consent, the battery had been very generally exploited in the press. To stop meant not only to pocket a great loss already incurred, facing a dark and uncertain future, but to most men animated by ordinary human feelings, it meant more than anything

else, an injury to personal pride. Pride? Pooh! that had nothing to do with the really serious practical problem, and the writers can testify that at the moment when his decision was reached, work stopped and the long vista ahead was peered into, Edison was as little concerned as if he had concluded that, after all, perhaps peach-pie might be better for present diet than apple-pie. He has often said that time meant very little to him, that he had but a small realization of its passage, and that ten or twenty years were as nothing when considering the development of a vital invention.

These references to personal pride recall another characteristic of Edison wherein he differs from most men. There are many individuals who derive an intense and not improper pleasure in regalia or military garments, with plenty of gold braid and brass buttons, and thus arrayed, in appearing before their friends and neighbors. Putting at the head of the procession the man who makes his appeal to public attention solely because of the brilliancy of his plumage, and passing down the ranks through the multitudes having a gradually decreasing sense of vanity in their personal accomplishment, Edison would be placed at the very end. Reference herein has been made to the fact that one of the two great English universities wished to confer a degree upon him, but that he was unable to leave his work for the brief time necessary to accept the honor. At that occasion it was pointed out to him that he should make every possible sacrifice to go, that the compliment was great, and that but few Americans had been so recognized. It was hope-

less—an appeal based on sentiment. Before him was something real—work to be accomplished—a problem to be solved. Beyond, was a prize as intangible as the button of the Legion of Honor, which he concealed from his friends that they might not feel he was "showing off." The fact is that Edison cares little for the approval of the world, but that he cares everything for the approval of himself. Difficult as it may be—perhaps impossible—to trace its origin, Edison possesses what he would probably call a well-developed case of New England conscience, for whose approval he is incessantly occupied.

These, then, may be taken as the characteristics of Edison that have enabled him to accomplish more than most men—a strong body, a clear and active mind, a developed imagination, a capacity of great mental and physical concentration, an iron-clad nervous system that knows no ennui, intense optimism, and courageous self-confidence. Any one having these capacities developed to the same extent, with the same opportunities for use, would probably accomplish as much. And yet there is a peculiarity about him that so far as is known has never been referred to before in print. He seems to be conscientiously afraid of appearing indolent, and in consequence subjects himself regularly to unnecessary hardship. Working all night is seldom necessary, or until two or three o'clock in the morning, yet even now he persists in such tests upon his strength. Recently one of the writers had occasion to present to him a long typewritten document of upward of thirty pages for his approval. It was taken home to Glenmont. Edison

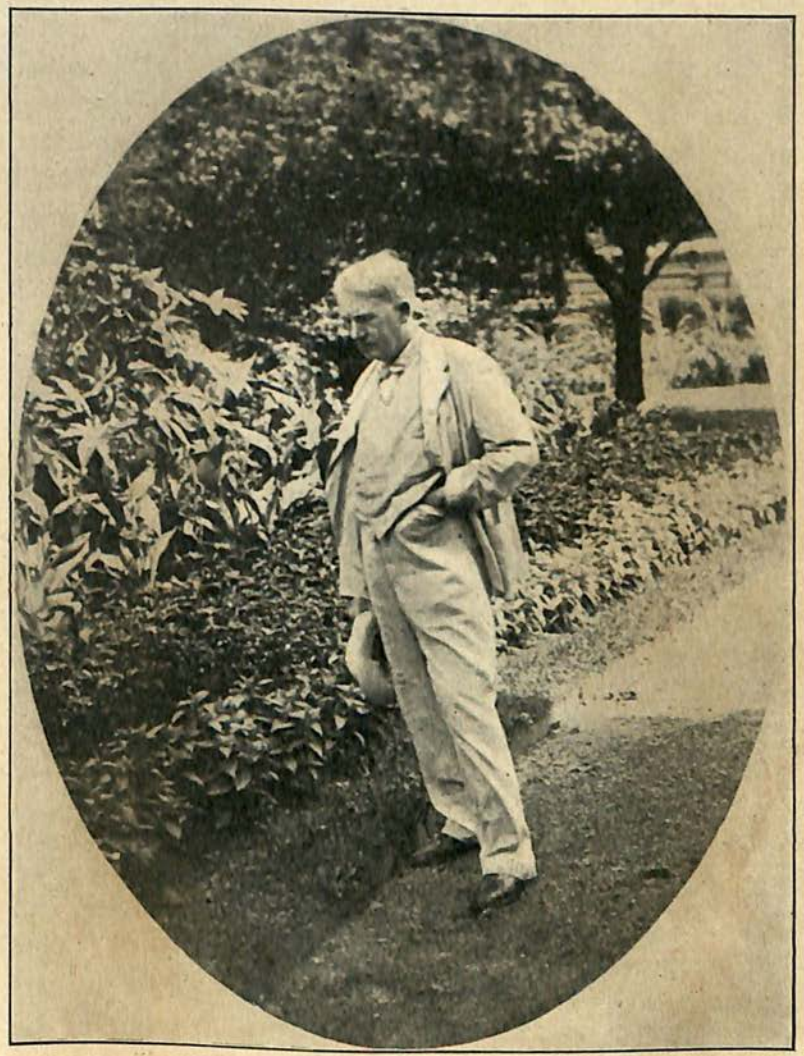

EDISON IN THE GARDEN OF HIS FLORIDA HOME

had a few minor corrections to make, probably not more than a dozen all told. They could have been embodied by interlineations and marginal notes in the ordinary way, and certainly would not have required more than ten or fifteen minutes of his time. Yet what did he do? *He copied out painstakingly the entire paper in long hand,* embodying the corrections as he went along, and presented the result of his work the following morning. At the very least such a task must have occupied several hours. How can such a trait—and scores of similar experiences could be given—be explained except by the fact that, evidently, he felt the need of special schooling in industry—that under no circumstances must he allow a thought of indolence to enter his mind?

Undoubtedly in the days to come Edison will not only be recognized as an intellectual prodigy, but as a prodigy of industry—of hard work. In his field as inventor and man of science he stands as clear-cut and secure as the lighthouse on a rock, and as indifferent to the tumult around. But as the "old man"—and before he was thirty years old he was affectionately so called by his laboratory associates—he is a normal, fun-loving, typical American. His sense of humor is intense, but not of the hothouse, overdeveloped variety. One of his favorite jokes is to enter the legal department with an air of great humility and apply for a job as an inventor! Never is he so preoccupied or fretted with cares as not to drop all thought of his work for a few moments to listen to a new story, with a ready smile all the while, and a hearty, boyish laugh at the end. His laugh, in fact,

is sometimes almost aboriginal; slapping his hands delightedly on his knees, he rocks back and forth and fairly shouts his pleasure. Recently a daily report of one of his companies that had just been started contained a large order amounting to several thousand dollars, and was returned by him with a miniature sketch of a small individual viewing that particular item through a telescope! His facility in making hasty but intensely graphic sketches is proverbial. He takes great delight in imitating the lingo of the New York street gamin. A dignified person named James may be greeted with: "Hully Gee! Chimmy, when did youse blow in?" He likes to mimic and imitate types, generally, that are distasteful to him. The sanctimonious hypocrite, the sleek speculator, and others whom he has probably encountered in life are done "to the queen's taste."

One very cold winter's day he entered the laboratory library in fine spirits, "doing" the decayed dandy, with imaginary cane under his arm, struggling to put on a pair of tattered imaginary gloves, with a self-satisfied smirk and leer that would have done credit to a real comedian. This particular bit of acting was heightened by the fact that even in the coldest weather he wears thin summer clothes, generally acid-worn and more or less disreputable. For protection he varies the number of his suits of underclothing, sometimes wearing three or four sets, according to the thermometer.

If one could divorce Edison from the idea of work, and could regard him separate and apart from his embodiment as an inventor and man of science, it

might truly be asserted that his temperament is essentially mercurial. Often he is in the highest spirits, with all the spontaneity of youth, and again he is depressed, moody, and violently angry. Anger with him, however, is a good deal like the story attributed to Napoleon:

"Sire, how is it that your judgment is not affected by your great rage?" asked one of his courtiers.

"Because," said the Emperor, "I never allow it to rise above this line," drawing his hand across his throat. Edison has been seen sometimes almost beside himself with anger at a stupid mistake or inexcusable oversight on the part of an assistant, his voice raised to a high pitch, sneeringly expressing his feelings of contempt for the offender; and yet when the culprit, like a bad school-boy, has left the room, Edison has immediately returned to his normal poise, and the incident is a thing of the past. At other times the unsettled condition persists, and his spleen is vented not only on the original instigator but upon others who may have occasion to see him, sometimes hours afterward. When such a fit is on him the word is quickly passed around, and but few of his associates find it necessary to consult with him at the time. The genuine anger can generally be distinguished from the imitation article by those who know him intimately by the fact that when really enraged his forehead between the eyes partakes of a curious rotary movement that cannot be adequately described in words. It is as if the storm-clouds within are moving like a whirling cyclone. As a general rule, Edison does not get genuinely angry at mistakes and other human

weaknesses of his subordinates; at best he merely simulates anger. But woe betide the one who has committed an act of bad faith, treachery, dishonesty, or ingratitude; *then* Edison can show what it is for a strong man to get downright mad. But in this respect he is singularly free, and his spells of anger are really few. In fact, those who know him best are continually surprised at his moderation and patience, often when there has been great provocation. People who come in contact with him and who may have occasion to oppose his views, may leave with the impression that he is hot-tempered; nothing could be further from the truth. He argues his point with great vehemence, pounds on the table to emphasize his views, and illustrates his theme with a wealth of apt similes; but, on account of his deafness, it is difficult to make the argument really two-sided. Before the visitor can fully explain his side of the matter some point is brought up that starts Edison off again, and new arguments from his viewpoint are poured forth. This constant interruption is taken by many to mean that Edison has a small opinion of any arguments that oppose him; but he is only intensely in earnest in presenting his own side. If the visitor persists until Edison has seen both sides of the controversy, he is always willing to frankly admit that his own views may be unsound and that his opponent is right. In fact, after such a controversy, both parties going after each other hammer and tongs, the arguments *to him* being carried on at the very top of one's voice to enable him to hear, and *from him* being equally loud in the excitement of the discussion, he has often

said: "I see now that my position was absolutely rotten."

Obviously, however, all of these personal characteristics have nothing to do with Edison's position in the world of affairs. They show him to be a plain, easy-going, placid American, with no sense of self-importance, and ready at all times to have his mind turned into a lighter channel. In private life they show him to be a good citizen, a good family man, absolutely moral, temperate in all things, and of great charitableness to all mankind. But what of his position in the age in which he lives? Where does he rank in the mountain range of great Americans?

It is believed that from the other chapters of this book the reader can formulate his own answer to the question.

INTRODUCTION TO THE APPENDIX

THE reader who has followed the foregoing narrative may feel that inasmuch as it is intended to be an historical document, an appropriate addendum thereto would be a digest of all the inventions of Edison. The desirability of such a digest is not to be denied, but as there are some twenty-five hundred or more inventions to be considered (including those covered by caveats), the task of its preparation would be stupendous. Besides, the resultant data would extend this book into several additional volumes, thereby rendering it of value chiefly to the technical student, but taking it beyond the bounds of biography.

We should, however, deem our presentation of Mr. Edison's work to be imperfectly executed if we neglected to include an intelligible exposition of the broader theoretical principles of his more important inventions. In the following Appendix we have therefore endeavored to present a few brief statements regarding Mr. Edison's principal inventions, classified as to subject-matter and explained in language as free from technicalities as is possible. No attempt has been made to conform with strictly scientific terminology, but, for the benefit of the general reader, well-understood conventional expressions, such as "flow of current," etc., have been employed. It should be borne in

mind that each of the following items has been treated as a whole or class, generally speaking, and not as a digest of all the individual patents relating to it. Any one who is sufficiently interested can obtain copies of any of the patents referred to for five cents each by addressing the Commissioner of Patents, Washington, D. C.

APPENDIX

I

THE STOCK PRINTER

IN these modern days, when the Stock Ticker is in universal use, one seldom, if ever, hears the name of Edison coupled with the little instrument whose chatterings have such tremendous import to the whole world. It is of much interest, however, to remember the fact that it was by reason of his notable work in connection with this device that he first became known as an inventor. Indeed, it was through the intrinsic merits of his improvements in stock tickers that he made his real entrée into commercial life.

The idea of the ticker did not originate with Edison, as we have already seen in Chapter VII of the preceding narrative, but at the time of his employment with the Western Union, in Boston, in 1868, the crudities of the earlier forms made an impression on his practical mind, and he got out an improved instrument of his own, which he introduced in Boston through the aid of a professional promoter. Edison, then only twenty-one, had less business experience than the promoter, through whose manipulation he soon lost his financial interest in this early ticker enterprise. The narrative tells of his coming to New York in 1869, and immediately plunging into the business of gold and stock reporting. It was at this period that his real work on stock printers commenced, first individually, and later as a co-worker with F. L. Pope. This inventive period extended over a number of years, during which time he took out forty-six patents on

stock-printing instruments and devices, two of such patents being issued to Edison and Pope as joint inventors. These various inventions were mostly in the line of development of the art as it progressed during those early years, but out of it all came the Edison universal printer, which entered into very extensive use, and which is still used throughout the United States and in some foreign countries to a considerable extent at this very day.

Edison's inventive work on stock printers has left its mark upon the art as it exists at the present time. In his earlier work he directed his attention to the employment of a single-circuit system, in which only one wire was required, the two operations of setting the type-wheels and of printing being controlled by separate electromagnets which were actuated through polarized relays, as occasion required, one polarity energizing the electromagnet controlling the type-wheels, and the opposite polarity energizing the electromagnet controlling the printing. Later on, however, he changed over to a two-wire circuit, such as shown in Fig. 2 of this article in connection with the universal stock printer. In the earliest days of the stock printer, Edison realized the vital commercial importance of having all instruments recording precisely alike at the same moment, and it was he who first devised (in 1869) the "unison stop," by means of which all connected instruments could at any moment be brought to zero from the central transmitting station, and thus be made to work in correspondence with the central instrument and with one another. He also originated the idea of using only one inking-pad and shifting it from side to side to ink the type-wheels. It was also in Edison's stock printer that the principle of shifting type-wheels was first employed. Hence it will be seen that, as in many other arts, he made a lasting impression in this one by the intrinsic merits of the improvements resulting from his work therein.

We shall not attempt to digest the forty-six patents above named, nor to follow Edison through the progressive steps which led to the completion of his universal printer, but shall simply present a sketch of the instrument itself, and follow with a very brief and general explanation of its theory. The Edison universal printer, as it virtually appears in

practice, is illustrated in Fig. 1 below, from which it will be seen that the most prominent parts are the two type-wheels, the inking-pad, and the paper tape feeding from the reel, all appropriately placed in a substantial framework.

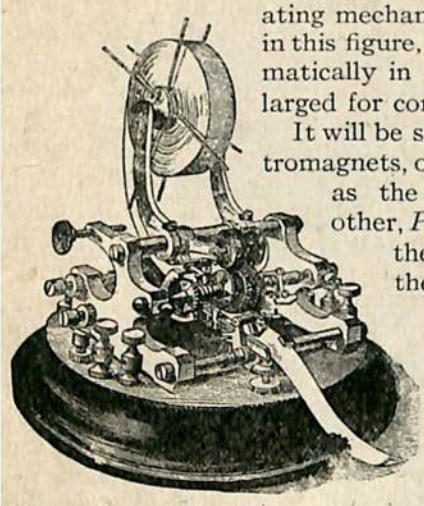

FIG. 1

The electromagnets and other actuating mechanism cannot be seen plainly in this figure, but are produced diagrammatically in Fig. 2, and somewhat enlarged for convenience of explanation.

It will be seen that there are two electromagnets, one of which, *TM*, is known as the "type-magnet," and the other, *PM*, as the "press-magnet," the former having to do with the operation of the type-wheels, and the latter with the pressing of the paper tape against them. As will be seen from the diagram, the armature, *A*, of the type-magnet has an extension arm, on the end of which is an escapement engaging with a toothed wheel placed at the extremity of the shaft carrying the type-wheels. This extension arm is pivoted at *B*. Hence, as the armature is alternately attracted when current passes around its electromagnet, and drawn up by the spring on cessation of current, it moves up and down, thus actuating the escapement and causing a rotation of the toothed wheel in the direction of the arrow. This, in turn, brings any desired letters or figures on the type-wheels to a central point, where they may be impressed upon the paper tape. One type-wheel carries letters, and the other one figures. These two wheels are mounted rigidly on a sleeve carried by the wheel-shaft. As it is desired to print from only one type-wheel at a time, it becomes necessary to shift them back and forth from time to time, in order to bring the desired characters in line with the paper tape. This is accomplished through the movements of a three-arm rocking-lever attached to the wheel-sleeve at

the end of the shaft. This lever is actuated through the agency of two small pins carried by an arm projecting from the press-lever, *PL*. As the latter moves up and down the pins play upon the under side of the lower arm of the rocking-lever, thus canting it and pushing the type-wheels to the right or left, as the case may be. The operation of shifting the type-wheels will be given further on.

The press-lever is actuated by the press-magnet. From the diagram it will be seen that the armature of the latter has a long, pivoted extension arm, or platen, trough-like in shape, in which the paper tape runs. It has already been noted that the object of the press-lever is to press this tape against that character of the type-wheel centrally located above it at the moment. It will at once be perceived that this action takes place when current flows through the electromagnet and its armature is attracted downward, the platen again dropping away from the type-wheel as the armature is released upon cessation of current. The paper

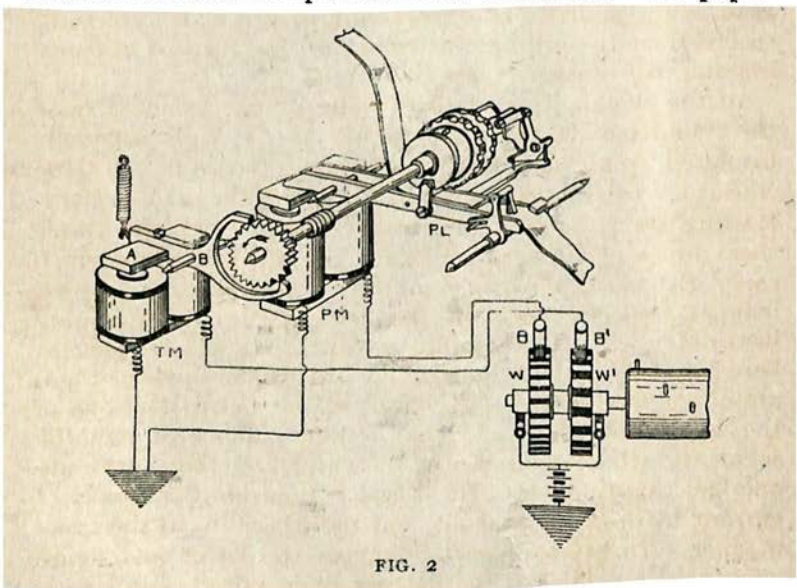

FIG. 2

"feed" is shown at the end of the press-lever, and consists of a push "dog," or pawl, which operates to urge the paper forward as the press-lever descends.

APPENDIX

The worm-gear which appears in the diagram on the shaft, near the toothed wheel, forms part of the unison stop above referred to, but this device is not shown in full, in order to avoid unnecessary complications of the drawing.

At the right-hand side of the diagram (Fig. 2) is shown a portion of the transmitting apparatus at a central office. Generally speaking, this consists of a motor-driven cylinder having metallic pins placed at intervals, and arranged spirally, around its periphery. These pins correspond in number to the characters on the type-wheels. A keyboard (not shown) is arranged above the cylinder, having keys lettered and numbered corresponding to the letters and figures on the type-wheels. Upon depressing any one of these keys the motion of the cylinder is arrested when one of its pins is caught and held by the depressed key. When the key is released the cylinder continues in motion. Hence, it is evident that the revolution of the cylinder may be interrupted as often as desired by manipulation of the various keys in transmitting the letters and figures which are to be recorded by the printing instrument. The method of transmission will presently appear.

In the sketch (Fig. 2) there will be seen, mounted upon the cylinder shaft, two wheels made up of metallic segments insulated from each other, and upon the hubs of these wheels are two brushes which connect with the main battery. Resting upon the periphery of these two segmental wheels there are two brushes to which are connected the wires which carry the battery current to the type-magnet and press-magnet, respectively, as the brushes make circuit by coming in contact with the metallic segments. It will be remembered that upon the cylinder there are as many pins as there are characters on the type-wheels of the ticker, and one of the segmental wheels, W, has a like number of metallic segments, while upon the other wheel, W', there are only one-half that number. The wheel W controls the supply of current to the press-magnet, and the wheel W' to the type-magnet. The type-magnet advances the letter and figure wheels one step when the magnet is energized, and a succeeding step when the circuit is broken. Hence, the metallic contact surfaces on wheel W' are, as stated, only half as many as on the wheel W, which controls the press-magnet.

It should be borne in mind, however, that the contact surfaces and insulated surfaces on wheel *W'* are together equal in number to the characters on the type-wheels; but the retractile spring of *TM* does half the work of operating the escapement. On the other hand, the wheel *W* has the full number of contact surfaces, because it must provide for the operative closure of the press-magnet circuit, whether the brush *B'* is in engagement with a metallic segment or an insulated segment of the wheel *W'*. As the cylinder revolves, the wheels are carried around with its shaft and current impulses flow through the wires to the magnets as the brushes make contact with the metallic segments of these wheels.

One example will be sufficient to convey to the reader an idea of the operation of the apparatus. Assuming, for instance, that it is desired to send out the letters AM to the printer, let us suppose that the pin corresponding to the letter A is at one end of the cylinder and near the upper part of its periphery, and that the letter M is about the centre of the cylinder and near the lower part of its periphery. The operator at the keyboard would depress the letter A, whereupon the cylinder would in its revolution bring the first-named pin against the key. During the rotation of the cylinder a current would pass through wheel *W'* and actuate *TM*, drawing down the armature and operating the escapement, which would bring the type-wheel to a point where the letter A would be central as regards the paper tape. When the cylinder came to rest, current would flow through the brush of wheel *W* to *PM*, and its armature would be attracted, causing the platen to be lifted and thus bringing the paper tape in contact with the type-wheel and printing the letter A. The operator next sends the letter M by depressing the appropriate key. On account of the position of the corresponding pin, the cylinder would make nearly half a revolution before bringing the pin to the key. During this half revolution the segmental wheels have also been turning, and the brushes have transmitted a number of current impulses to *TM*, which have caused it to operate the escapement a corresponding number of times, thus turning the type-wheels around to the letter M. When the cylinder stops, current once more goes to the press-magnet, and the

operation of lifting and printing is repeated. As a matter of fact, current flows over both circuits as the cylinder is rotated, but the press-magnet is purposely made to be comparatively "sluggish" and the narrowness of the segments on wheel *W* tends to diminish the flow of current in the press circuit until the cylinder comes to rest, when the current continuously flows over that circuit without interruption and fully energizes the press-magnet. The shifting of the type-wheels is brought about as follows: On the keyboard of the transmitter there are two characters known as "dots"—namely, the letter dot and the figure dot. If the operator presses one of these dot keys, it is engaged by an appropriate pin on the revolving cylinder. Meanwhile the type-wheels are rotating, carrying with them the rocking-lever, and current is pulsating over both circuits. When the type-wheels have arrived at the proper point the rocking-lever has been carried to a position where its lower arm is directly over one of the pins on the arm extending from the platen of the press-lever. The cylinder stops, and current operates the sluggish press-magnet, causing its armature to be attracted, thus lifting the platen and its projecting arm. As the arm lifts upward, the pin moves along the under side of the lower arm of the rocking-lever, thus causing it to cant and shift the type-wheels to the right or left, as desired. The principles of operation of this apparatus have been confined to a very brief and general description, but it is believed to be sufficient for the scope of this article.

NOTE.—The illustrations in this article are reproduced from *American Telegraphy and Encyclopedia of the Telegraph*, by William Maver, Jr., by permission of Maver Publishing Company, New York.

II

THE QUADRUPLEX AND PHONOPLEX

EDISON'S work in stock printers and telegraphy had marked him as a rising man in the electrical art of the period, but his invention of quadruplex telegraphy in 1874 was what brought him very prominently before the notice of the public. Duplex telegraphy, or the sending of two separate messages in opposite directions at the same time over one line, was known and practised previous to this time, but quadruplex telegraphy, or the simultaneous sending of four separate messages, two in each direction, over a single line, had not been successfully accomplished, although it had been the subject of many an inventor's dream and the object of anxious efforts for many long years.

In the early part of 1873, and for some time afterward, the system invented by Joseph Stearns was the duplex in practical use. In April of that year, however, Edison took up the study of the subject and filed two applications for patents. One of these applications[1] embraced an invention by which two messages could be sent not only *duplex*, or in opposite directions as above explained, but could also be sent "*diplex*"—that is to say, *in one direction*, simultaneously, *as separate and distinct messages, over the one line*. Thus there was introduced a new feature into the art of multiplex telegraphy, for, whereas duplexing (accomplished by varying the *strength* of the current) permitted messages to be sent simultaneously from opposite stations, diplexing (achieved by *also* varying the *direction* of the current) permitted the simultaneous transmission of two messages from the same station and their separate reception at the distant station.

[1] Afterward issued as Patent No. 162,633, April 27, 1875.

APPENDIX

The quadruplex was the tempting goal toward which Edison now constantly turned, and after more than a year's strenuous work he filed a number of applications for patents in the late summer of 1874. Among them was one which was issued some years afterward as Patent No. 480,567, covering his well-known quadruplex. He had improved his own diplex, combined it with the Stearns duplex and thereby produced a system by means of which four messages could be sent over a single line at the same time, two in each direction.

As the reader will probably be interested to learn something of the theoretical principles of this fascinating invention, we shall endeavor to offer a brief and condensed explanation thereof with as little technicality as the subject will permit. This explanation will necessarily be of somewhat elementary character for the benefit of the lay reader, whose indulgence is asked for an occasional reiteration introduced for the sake of clearness of comprehension. While the apparatus and the circuits are seemingly very intricate, the principles are really quite simple, and the difficulty of comprehension is more apparent than real if the underlying phenomena are studied attentively.

At the root of all systems of telegraphy, including multiplex systems, there lies the single basic principle upon which their performance depends—namely, the obtaining of a slight mechanical movement at the more or less distant end of a telegraph line. This is accomplished through the utilization of the phenomena of electromagnetism. These phenomena are easy of comprehension and demonstration. If a rod of soft iron be wound around with a number of turns of insulated wire, and a current of electricity be sent through the wire, the rod will be instantly magnetized and will remain a magnet as long as the current flows; but when the current is cut off the magnetic effect instantly ceases. This device is known as an electromagnet, and the charging and discharging of such a magnet may, of course, be repeated indefinitely. Inasmuch as a magnet has the power of attracting to itself pieces of iron or steel, the basic importance of an electromagnet in telegraphy will be at once apparent when we consider the sounder, whose clicks are familiar to every ear. This instrument consists essentially of an electro-

magnet of horseshoe form with its two poles close together, and with its armature, a bar of iron, maintained in close proximity to the poles, but kept normally in a retracted position by a spring. When the distant operator presses down his key the circuit is closed and a current passes along the line and through the (generally two) coils of the electromagnet, thus magnetizing the iron core. Its attractive power draws the armature toward the poles. When the operator releases the pressure on his key the circuit is broken, current does not flow, the magnetic effect ceases, and the armature is drawn back by its spring. These movements give rise to the clicking sounds which represent the dots and dashes of the Morse or other alphabet as transmitted by the operator. Similar movements, produced in like manner, are availed of in another instrument known as the relay, whose office is to act practically as an automatic transmitter key, repeating the messages received in its coils, and sending them on to the next section of the line, equipped with its own battery; or, when the message is intended for its own station, sending the message to an adjacent sounder included in a local battery circuit. With a simple circuit, therefore, between two stations and where an intermediate battery is not necessary, a relay is not used.

Passing on to the consideration of another phase of the phenomena of electromagnetism, the reader's attention is called to Fig. 1, in which will be seen on the left a simple

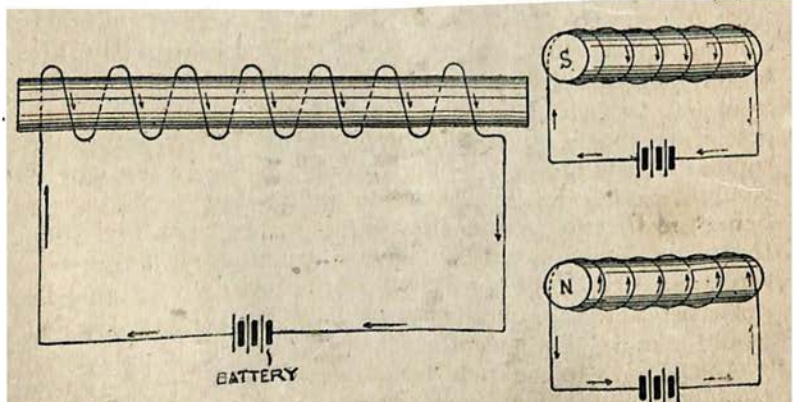

FIG. 1

form of electromagnet consisting of a bar of soft iron wound around with insulated wire, through which a current is flowing from a battery. The arrows indicate the direction of flow.

All magnets have two poles, north and south. A permanent magnet (made of steel, which, as distinguished from soft iron, retains its magnetism for long periods) is so called because it is permanently magnetized and its polarity remains fixed. In an electromagnet the magnetism exists

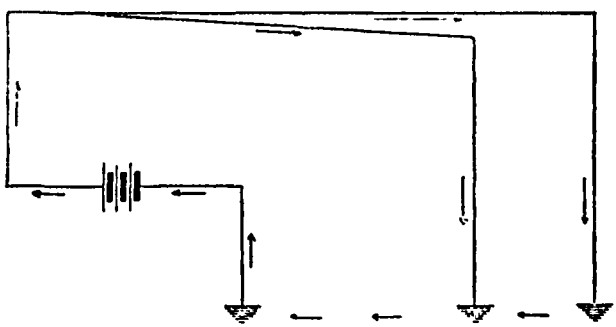

FIG. 2

only as long as current is flowing through the wire, and the polarity of the soft-iron bar is determined by the *direction* of flow of current around it for the time being. If the direction is reversed, the polarity will also be reversed. Assuming, for instance, the bar to be end-on toward the observer, that end will be a south pole if the current is flowing from left to right, clockwise, around the bar; or a north pole if flowing in the other direction, as illustrated at the right of the figure. It is immaterial which way the wire is wound around the bar, the determining factor of polarity being the *direction* of the current. It will be clear, therefore, that if two *equal* currents be passed around a bar in opposite directions (Fig. 3) they will tend to produce exactly opposite polarities and thus neutralize each other. Hence, the bar would remain non-magnetic.

As the path to the quadruplex passes through the duplex, let us consider the Stearns system, after noting one other principle—namely, that if more than one path is presented

in which an electric current may complete its circuit, it divides in proportion to the resistance of each path. Hence, if we connect one pole of a battery with the earth, and from the other pole run to the earth two wires of equal resistance, as illustrated in Fig. 2, equal currents will traverse the wires.

The above principles were employed in the Stearns differential duplex system in the following manner: Referring to Fig. 3, suppose a wire, *A*, is led from a battery around a bar of soft iron from left to right, and another wire of equal resistance and equal number of turns, *B*, around from right to left. The flow of current will cause two equal opposing actions to be set up in the bar; one will exactly offset the other, and no magnetic effect will be produced. A relay thus wound is known as a differential relay—more generally called a neutral relay.

The non-technical reader may wonder what use can possibly be made of an apparently non-operative piece of appara-

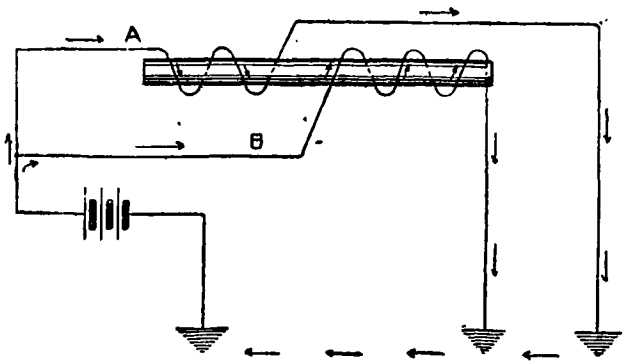

FIG. 3

tus. It must be borne in mind, however, in considering a duplex system, that a differential relay is used *at each end* of the line and forms part of the circuit; and that while each relay must be absolutely unresponsive to the signals *sent out from its home office*, it must respond to signals transmitted by a *distant* office. Hence, the next figure (4), with its accompanying explanation, will probably make the matter clear. If another battery, *D*, be introduced at the

distant end of the wire *A* the differential or neutral relay becomes actively operative as follows: Battery *C* supplies wires *A* and *B* with an equal current, but battery *D* doubles the strength of the current traversing wire *A*. This is sufficient to not only neutralize the magnetism which the cur-

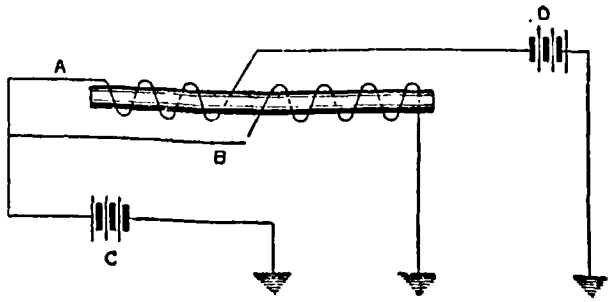

FIG. 4

rent in wire *B* would tend to set up, but also—by reason of the excess of current in wire *A*—to make the bar a magnet whose polarity would be determined by the direction of the flow of current around it.

In the arrangement shown in Fig. 4 the batteries are so connected that current flow is in the same direction, thus doubling the amount of current flowing through wire *A*. But suppose the batteries were so connected that the current from each set flowed in an opposite direction? The result would be that these currents would oppose and neutralize each other, and, therefore, none would flow in wire *A*. Inasmuch, however, as there is nothing to hinder, current would flow from battery *C* through wire *B*, and the bar would therefore be magnetized. Hence, assuming that the relay is to be actuated from the distant end, *D*, it is in a sense immaterial whether the batteries connected with wire *A* assist or oppose each other, as, in either case, the bar would be magnetized only through the operation of the distant key.

A slight elaboration of Fig. 4 will further illustrate the principle of the differential duplex. In Fig. 5 are two stations, *A* the home end, and *B* the distant station to which a message is to be sent. The relay at each end has two coils, 1 and 2, No. 1 in each case being known as the "main-line

coil" and 2 as the "artificial-line coil." The latter, in each case, has in its circuit a resistance, *R*, to compensate for the resistance of the main line, so that there shall be no inequalities in the circuits. The artificial line, as well as that to which the two coils are joined, are connected to earth. There is a battery, *C*, and a key, *K*. When the key is depressed, current flows through the relay coils at *A*, but no magnetism is produced, as they oppose each other. The current, however, flows out through the main-line coil over the line and through the main-line coil 1 at *B*, completing its circuit to earth and magnetizing the bar of the relay, thus causing its armature to be attracted. On releasing the key the circuit is broken and magnetism instantly ceases.

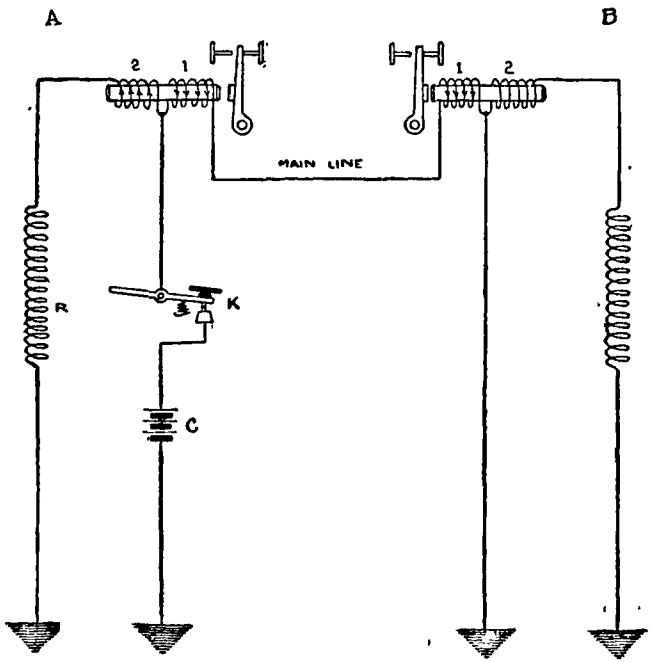

FIG. 5

It will be evident, therefore, that the operator at *A* may cause the relay at *B* to act without affecting his own relay. Similar effects would be produced from *B* to *A* if the battery and key were placed at the *B* end.

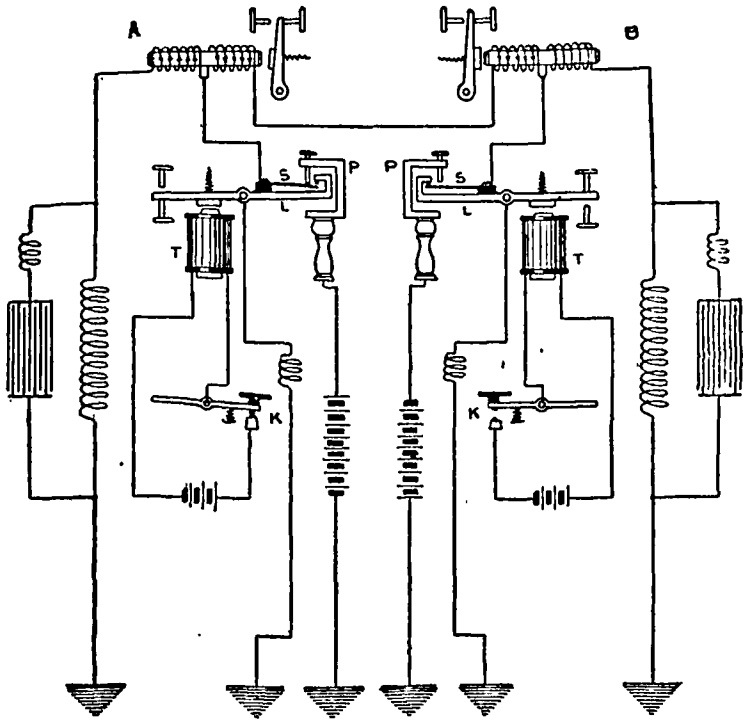

FIG. 6

If, therefore, like instruments are placed at each end of the line, as in Fig. 6, we have a differential duplex arrangement by means of which two operators may actuate relays at the ends distant from them, without causing the operation of the relays at their home ends. In practice this is done by means of a special instrument known as a continuity preserving transmitter, or, usually, as a transmitter. This consists of an electromagnet, *T*, operated by a key, *K*, and separate battery. The armature lever, *L*, is long, pivoted in the centre, and is bent over at the end. At a point a little beyond its centre is a small piece of insulating material to which is screwed a strip of spring metal, *S*. Conveniently placed with reference to the end of the lever is a bent metallic piece, *P*, having a contact screw in

its upper horizontal arm, and attached to the lower end of this bent piece is a post, or standard, to which the main battery is electrically connected. The relay coils are connected by wire to the spring piece, *S*, and the armature lever is connected to earth. If the key is depressed, the armature is attracted and its bent end is moved upward, depressing the spring which makes contact with the upper screw, which places the battery to the line, and simultaneously breaks the ground connection between the spring and the upturned end of the lever, as shown at the left. When the key is released the battery is again connected to earth. The compensating resistances and condensers necessary for a duplex arrangement are shown in the diagram.

In Fig. 6 one transmitter is shown as closed, at *A*, while the other one is open. From our previous illustrations and explanations it will be readily seen that, with the transmitter closed at station *A*, current flows *via* post *P*, through *S*, and to both relay coils at *A*, thence over the main line to main-line coil at *B*, and down to earth through *S* and the armature lever with its grounded wire. The relay at *A* would be unresponsive, but the core of the relay at *B* would be magnetized and its armature respond to signals from *A*. In like manner, if the transmitter at *B* be closed, current would flow through similar parts and thus cause the relay at *A* to respond. If both transmitters be closed simultaneously, both batteries will be placed to the line, which would practically result in doubling the current in each of the main-line coils, in consequence of which both relays are energized and their armatures attracted through the operation of the keys at the distant ends. Hence, two messages can be sent in opposite directions over the same line simultaneously.

The reader will undoubtedly see quite clearly from the above system, which rests upon varying the *strength* of the current, that two messages could not be sent in the same direction over the one line at the same time. To accomplish this object Edison introduced another and distinct feature—namely, the using of the same current, but *also* varying its *direction* of flow; that is to say, alternately reversing the *polarity* of the batteries as applied to the line, and thus producing corresponding changes in the polarity

of another specially constructed type of relay, called a polarized relay. To afford the reader a clear conception of such a relay we would refer again to Fig. 1 and its explanation, from which it appears that the polarity of a soft-iron bar is determined not by the strength of the current flowing around it but by the direction thereof.

With this idea clearly in mind, the theory of the polarized relay, generally called "polar" relay, as presented in the diagram (Fig. 7), will be readily understood.

A is a bar of soft iron, bent as shown, and wound around with insulated copper wire, the ends of which are connected

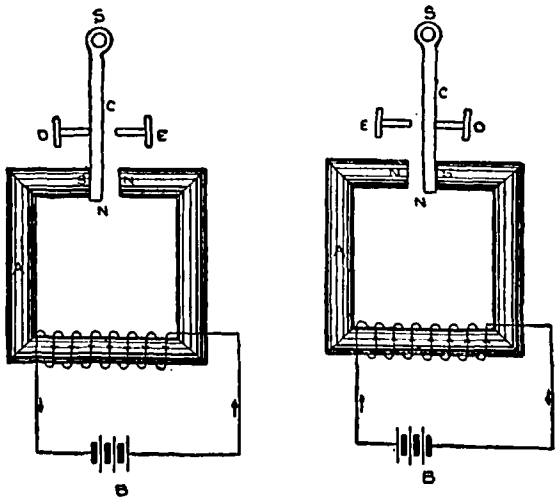

FIG. 7

with a battery, *B*, thus forming an electromagnet. An essential part of this relay consists of a swinging *permanent* magnet, *C*, whose polarity remains fixed, that end between the terminals of the electromagnet being a north pole. Inasmuch as unlike poles of magnets are attracted to each other and like poles repelled, it follows that this north pole will be repelled by the north pole of the electromagnet, but will swing over and be attracted by its south pole. If the direction of flow of current be reversed, by reversing the battery, the electromagnetic polarity also reverses and the end of the permanent magnet swings over to the other side.

This is shown in the two figures of Fig. 7. This device being a relay, its purpose is to repeat transmitted signals into a local circuit, as before explained. For this purpose there are provided at *D* and *E* a contact and a back stop, the former of which is opened and closed by the swinging permanent magnet, thus opening and closing the local circuit.

Manifestly there must be provided some convenient way for rapidly transposing the direction of the current flow if such a device as the polar relay is to be used for the reception of telegraph messages, and this is accomplished by means of an instrument called a pole-changer, which consists essentially of a movable contact piece connected permanently to the earth, or grounded, and arranged to connect one or the other pole of a battery to the line and simultaneously ground the other pole. This action of the pole-changer is effected by movements of the armature of an electromagnet through the manipulation of an ordinary telegraph key by an operator at the home station, as in the operation of the "transmitter," above referred to.

By a combination of the neutral relay and the polar relay, two operators, by manipulating two telegraph keys in the ordinary way, can simultaneously send two messages over one line in the *same* direction with the *same* current, one operator varying its strength and the other operator varying its polarity or direction of flow. This principle was covered by Edison's Patent No. 162,633, and was known as the "diplex" system, although, in the patent referred to, Edison showed and claimed the adaptation of the principle to duplex telegraphy. Indeed, as a matter of fact, it was found that by winding the polar relay differentially and arranging the circuits and collateral appliances appropriately, the polar duplex system was more highly efficient than the neutral system, and it is extensively used to the present day.

Thus far we have referred to two systems, one the neutral, or differential duplex, and the other the combination of the neutral and polar relays, making a diplex system. By one of these two systems a single wire could be used for sending two messages in opposite directions, and by the other in the same direction or in opposite directions. Edison followed up his work on the diplex and combined the two

systems into the quadruplex, by means of which *four* messages could be sent and received simultaneously over the one wire, two in each direction, thus employing eight operators—four at each end—two sending and two receiving. The general principles of quadruplex telegraphy are based upon the phenomena which we have briefly outlined in connection with the neutral relay and the polar relay. The equipment of such a system at each end of the line consists of these two instruments, together with the special form of transmitter and the pole-changer and their keys for actuating the neutral and polar relays at the other, or distant, end. Besides these there are the compensating resistances and condensers. All of these will be seen in the diagram (Fig. 8). It will be understood, of course, that the polar relay, as used in the quadruplex system, is wound differentially, and therefore its operation is somewhat similar in principle to that of the differentially wound neutral relay, in that it does not respond to the operation of the key at the home office, but only operates in response to the movements of the distant key.

Our explanation has merely aimed to show the underlying phenomena and principles in broad outline without entering into more detail than was deemed absolutely necessary. It should be stated, however, that between the outline and the filling in of the details there was an enormous amount of hard work, study, patient plodding, and endless experiments before Edison finally perfected his quadruplex system in the year 1874.

If it were attempted to offer here a detailed explanation of the varied and numerous operations of the quadruplex, this article would assume the proportions of a treatise. An idea of their complexity may be gathered from the following, which is quoted from *American Telegraphy and Encyclopedia of the Telegraph*, by William Maver, Jr.:

"It may well be doubted whether in the whole range of applied electricity there occur such beautiful combinations, so quickly made, broken up, and others reformed, as in the operation of the Edison quadruplex. For example, it is quite demonstrable that during the making of a simple dash of the Morse alphabet by the neutral relay at the home

station the distant pole-changer may reverse its battery several times; the home pole-changer may do likewise, and the home transmitter may increase and decrease the electromotive force of the home battery repeatedly. Simultaneously, and, of course, as a consequence of the foregoing actions, the home neutral relay itself may have had its magnetism reversed several times, and the *signal*, that is, the dash, will have been made, partly by the home battery, partly by the distant and home batteries combined, partly by current on the main line, partly by current on the artificial line, partly by the main-line 'static' current, partly by the condenser static current, and yet, on a well-adjusted circuit the dash will have been produced on the quadruplex sounder as clearly as any dash on an ordinary single-wire sounder."

We present a diagrammatic illustration of the Edison quadruplex, battery key system, in Fig. 8, and refer the reader to the above or other text-books if he desires to make a close study of its intricate operations. Before finally dismissing the quadruplex, and for the benefit of the inquiring reader who may vainly puzzle over the intricacies of the circuits shown in Fig. 8, a hint as to an essential difference between the neutral relay, as used in the duplex and as used in the quadruplex, may be given. With the duplex, as we have seen, the current on the main line is changed in strength only when both keys at *opposite* stations are closed together, so that a current due to both batteries flows over the main line. When a single message is sent from one station to the other, or when both stations are sending messages that do not conflict, only one battery or the other is connected to the main line; but with the quadruplex, suppose one of the operators, in New York for instance, is sending reversals of current to Chicago; we can readily see how these changes in polarity will operate the polar relay at the distant station, but why will they not also operate the neutral relay at the distant station as well? This difficulty was solved by dividing the battery at each station into two unequal parts, the smaller battery being always in circuit with the pole-changer, ready to have its polarity reversed on the main line to operate the distant polar relay, but the spring retracting the

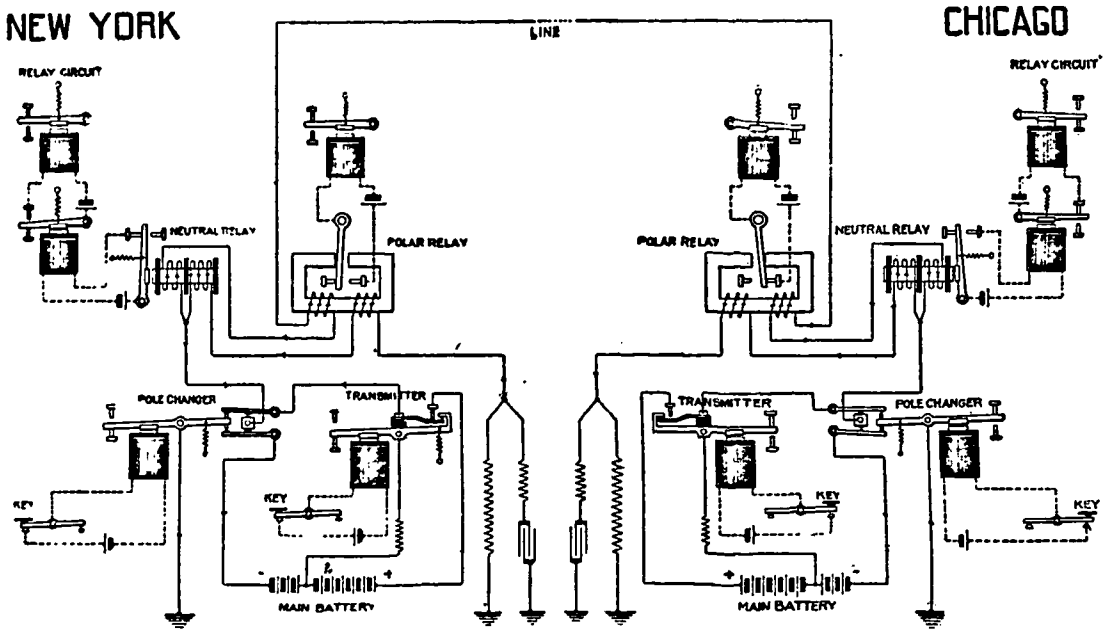
NEW YORK
CHICAGO
LINE
RELAY CIRCUIT
RELAY CIRCUIT
NEUTRAL RELAY
POLAR RELAY
POLAR RELAY
NEUTRAL RELAY
POLE CHANGER
TRANSMITTER
TRANSMITTER
POLE CHANGER
KEY
KEY
KEY
KEY
MAIN BATTERY
MAIN BATTERY

FIG. 8

armature of the neutral relay is made so stiff as to resist these weak currents. If, however, the transmitter is operated at the same end, the entire battery is connected to the main line, and the strength of this current is sufficient to operate the neutral relay. Whether the part or all the battery is alternately connected to or disconnected from the main line by the transmitter, the current so varied in strength is subject to reversal of polarity by the pole-changer; but the variations in strength have no effect upon the distant polar relay, because that relay being responsive to changes in polarity of a weak current is obviously responsive to corresponding changes in polarity of a powerful current. With this distinction before him, the reader will have no difficulty in following the circuits of Fig. 8, bearing always in mind that by reason of the differential winding of the polar and neutral relays, neither of the relays at one station will respond to the home battery, and can only respond to the distant battery—the polar relay responding when the polarity of the current is reversed, whether the current be strong or weak, and the neutral relay responding when the line-current is increased, regardless of its polarity. It should be added that besides the system illustrated in Fig. 8, which is known as the differential principle, the quadruplex was also arranged to operate on the Wheatstone bridge principle; but it is not deemed necessary to enter into its details. The underlying phenomena were similar, the difference consisting largely in the arrangement of the circuits and apparatus.[1]

Edison made another notable contribution to multiplex telegraphy some years later in the Phonoplex. The name suggests the use of the telephone, and such indeed is the case. The necessity for this invention arose out of the problem of increasing the capacity of telegraph lines employed in "through" and "way" service, such as upon railroads. In a railroad system there are usually two terminal stations and a number of way stations. There is naturally much intercommunication, which would be greatly curtailed by a system having the capacity of only a single message at a time. The duplexes above described could not

[1] Many of the illustrations in this article are reproduced from *American Telegraphy and Encyclopedia of the Telegraph*, by William Maver, Jr., by permission of Maver Publishing Company, New York.

be used on a railroad telegraph system, because of the necessity of electrically balancing the line, which, while entirely feasible on a through line, would not be practicable between a number of intercommunicating points. Edison's phonoplex normally doubled the capacity of telegraph lines, whether employed on way business or through traffic, but in actual practice made it possible to obtain more than double service. It has been in practical use for many years on some of the leading railroads of the United States.

The system is a combination of telegraphic apparatus and telephone receiver, although in this case the latter instrument is not used in the generally understood manner. It is well known that the diaphragm of a telephone vibrates with the fluctuations of the current energizing the magnet beneath it. If the make and break of the magnetizing current be rapid, the vibrations being within the limits of the human ear, the diaphragm will produce an audible sound; but if the make and break be as slow as with ordinary Morse transmission, the diaphragm will be merely flexed and return to its original form without producing a sound. If, therefore, there be placed in the same circuit a regular telegraph relay and a special telephone, an operator may, by manipulating a key, operate the relay (and its sounder) without producing a sound in the telephone, as the makes and breaks of the key are far below the limit of audibility. But if through the same circuit, by means of another key suitably connected, there is sent the rapid changes in current from an induction-coil, it will cause a series of loud clicks in the telephone, corresponding to the signals transmitted; but this current is too weak to affect the telegraph relay. It will be seen, therefore, that this method of duplexing is practised, not by varying the strength or polarity, but by sending *two kinds of current* over the wire. Thus, two sets of Morse signals can be transmitted by two operators over one line at the same time without interfering with each other, and not only between terminal offices, but also between a terminal office and any intermediate office, or between two intermediate offices alone.

III

AUTOMATIC TELEGRAPHY

FROM the year 1848, when a Scotchman, Alexander Bain, first devised a scheme for rapid telegraphy by automatic methods, down to the beginning of the seventies, many other inventors had also applied themselves to the solution of this difficult problem, with only indifferent success. "Cheap telegraphy" being the slogan of the time, Edison became arduously interested in the subject, and at the end of three years of hard work produced an entirely successful system, a public test of which was made on December 11, 1873, when about twelve thousand (12,000) words were transmitted over a single wire from Washington to New York. in twenty-two and one-half minutes. Edison's system was commercially exploited for several years by the Automatic Telegraph Company, as related in the preceding narrative.

As a premise to an explanation of the principles involved, it should be noted that the transmission of telegraph messages by hand at a rate of fifty words per minute is considered a good average speed; hence, the availability of a telegraph line, as thus operated, is limited to this capacity, except as it may be multiplied by two with the use of the duplex, or by four, with the quadruplex. Increased rapidity of transmission may, however, be accomplished by automatic methods, by means of which, through the employment of suitable devices, messages may be stamped in or upon a paper tape; transmitted through automatically acting instruments, and be received at distant points in visible characters, upon a similar tape, at a rate twenty or more times greater—a speed far beyond the possibilities of the human hand to transmit or the ear to receive.

In Edison's system of automatic telegraphy a paper tape was perforated with a series of round holes, so arranged and

spaced as to represent Morse characters, forming the words of the message to be transmitted. This was done in a special machine of Edison's invention, called a perforator, consisting of a series of punches operated by a bank of keys—typewriter fashion. The paper tape passed over a cylinder, and was kept in regular motion so as to receive the perforations in proper sequence.

The perforated tape was then placed in the transmitting instrument, the essential parts of which were a metallic drum and a projecting arm carrying two small wheels, which, by means of a spring, were maintained in constant pressure on the drum. The wheels and drum were electrically connected in the line over which the message was to be sent. current being supplied by batteries in the ordinary manner.

When the transmitting instrument was in operation, the perforated tape was passed over the drum in continuous, progressive motion. Thus, the paper passed between the drum and the two small wheels, and, as dry paper is a non-conductor, current was prevented from passing until a perforation was reached. As the paper passed along, the wheels dropped into the perforations, making momentary contacts with the drum beneath and causing momentary impulses of current to be transmitted over the line in the same way that they would be produced by the manipulation of the telegraph key, but with much greater rapidity. The perforations being so arranged as to regulate the length of the contact, the result would be the transmission of long and short impulses corresponding with the dots and dashes of the Morse alphabet.

The receiving instrument at the other end of the line was constructed upon much the same general lines as the transmitter, consisting of a metallic drum and reels for the paper tape. Instead of the two small contact wheels, however, a projecting arm carried an iron pin or stylus, so arranged that its point would normally impinge upon the periphery of the drum. The iron pin and the drum were respectively connected so as to be in circuit with the transmission line and batteries. As the principle involved in the receiving operation was electrochemical decomposition, the paper tape upon which the incoming message was to be received was moistened with a chemical solution readily decom-

posable by the electric current. This paper, while still in a damp condition, was passed between the drum and stylus in continuous, progressive motion. When an electrical impulse came over the line from the transmitting end, current passed through the moistened paper from the iron pin, causing chemical decomposition, by reason of which the iron would be attacked and would mark a line on the paper. Such a line would be long or short, according to the duration of the electric impulse. Inasmuch as a succession of such impulses coming over the line owed their orgin to the perforations in the transmitting tape, it followed that the resulting marks upon the receiving tape would correspond thereto in their respective lengths. Hence, the transmitted message was received on the tape in visible dots and dashes representing characters of the Morse alphabet.

The system will, perhaps, be better understood by reference to the following diagrammatic sketch of its general principles:

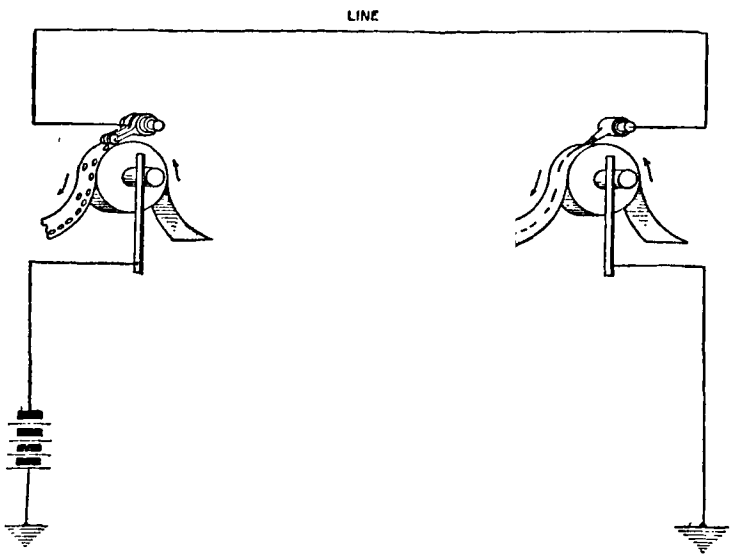

FIG. 1

Some idea of the rapidity of automatic telegraphy may be obtained when we consider the fact that with the use of Edison's system in the early seventies it was common

practice to transmit and receive from three to four thousand words a minute over a single line between New York and Philadelphia. This system was exploited through the use of a moderately paid clerical force.

In practice, there was employed such a number of perforating machines as the exigencies of business demanded. Each machine was operated by a clerk, who translated the message into telegraphic characters and prepared the transmitting tape by punching the necessary perforations therein. An expert clerk could perforate such a tape at the rate of fifty to sixty words per minute. At the receiving end the tape was taken by other clerks who translated the Morse characters into ordinary words, which were written on message blanks for delivery to persons for whom the messages were intended.

This latter operation—"copying," as it was called—was not consistent with truly economical business practice. Edison therefore undertook the task of devising an improved system whereby the message when received would not require translation and rewriting, but would automatically appear on the tape in plain letters and words, ready for instant delivery.

The result was his automatic Roman letter system, the basis for which included the above-named general principles of perforated transmission tape and electrochemical decomposition. Instead of punching Morse characters in the transmission tape, however, it was perforated with a series of small round holes forming Roman letters. The verticals of these letters were originally five holes high. The transmitting instrument had five small wheels or rollers, instead of two, for making contacts through the perforations and causing short electric impulses to pass over the lines. At first five lines were used to carry these impulses to the receiving instrument, where there were five iron pins impinging on the drum. By means of these pins the chemically prepared tape was marked with dots corresponding to the impulses as received, leaving upon it a legible record of the letters and words transmitted.

For purposes of economy in investment and maintenance, Edison devised subsequently a plan by which the number of conducting lines was reduced to two, instead of five. The

verticals of the letters were perforated only four holes high, and the four rollers were arranged in pairs, one pair being slightly in advance of the other. There were, of course, only four pins at the receiving instrument. Two were of iron and two of tellurium, it being the gist of Edison's plan to effect the marking of the chemical paper by one metal with a positive current, and by the other metal with a negative current. In the following diagram, which shows the theory of this arrangement, it will be seen that both the transmitting rollers and the receiving pins are arranged in pairs, one pair in each case being slightly in advance of the other. Of these receiving pins, one pair—1 and 3—are of iron, and the other pair—2 and 4—of tellurium. Pins 1-2 and 3-4 are electrically connected together in other pairs, and then each of these pairs is connected with one of the main lines that run respectively to the middle of two groups of batteries at the transmitting end. The terminals of these groups of batteries are connected respectively to the four rollers which impinge upon the transmitting drum, the negatives being connected to 5 and 7, and the positives to 6 and 8, as denoted by the letters *N* and *P*. The transmitting and receiving drums are respectively connected to earth.

In operation the perforated tape is placed on the transmission drum, and the chemically prepared tape on the receiving drum. As the perforated tape passes over the transmission drum the advanced rollers 6 or 8 first close the circuit through the perforations, and a positive current passes from the batteries through the drum and down to the ground; thence through the earth at the receiving end up to the other drum and back to the batteries *via* the tellurium pins 2 or 4 and the line wire. With this positive current the tellurium pins make marks upon the paper tape, but the iron pins make no mark. In the merest fraction of a second, as the perforated paper continues to pass over the transmission drum, the rollers 5 or 7 close the circuit through other perforations and t e current passes in the opposite direction, over the line wire, through pins 1 or 3, and returns through the earth. In this case the iron pins mark the paper tape, but the tellurium pins make no mark. It will be obvious, therefore, that as the rollers are set so as to allow of currents of opposite polarity to be alternately and

rapidly sent by means of the perforations, the marks upon the tape at the receiving station will occupy their proper relative positions, and the aggregate result will be letters corresponding to those perforated in the transmission tape.

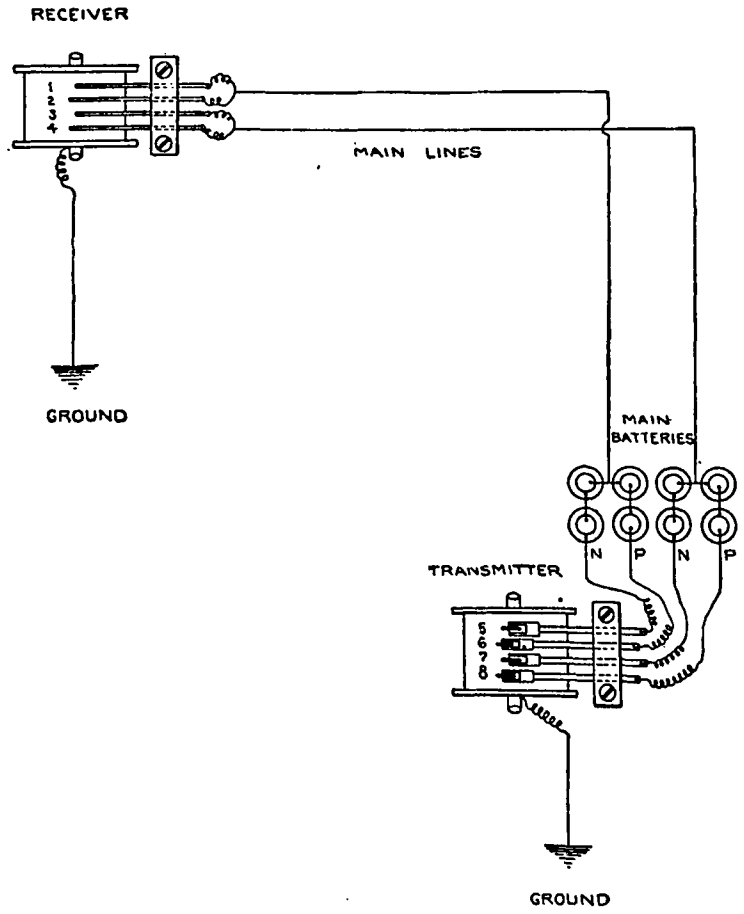

FIG. 2

Edison subsequently made still further improvements in this direction, by which he reduced the number of conducting wires to one, but the principles involved were analogous to the one just described.

This Roman letter system was in use for several years on lines between New York, Philadelphia, and Washington, and was so efficient that a speed of three thousand words a minute was attained on the line between the two first-named cities.

Inasmuch as there were several proposed systems of rapid automatic telegraphy in existence at the time Edison entered the field, but none of them in practical commercial use, it becomes a matter of interest to inquire wherein they were deficient, and what constituted the elements of Edison's success.

The chief difficulties in the transmission of Morse characters had been two in number, the most serious of which was that on the receiving tape the characters would be prolonged and run into one another, forming a draggled line and thus rendering the message unintelligible. This arose from the fact that, on account of the rapid succession of the electric impluses, there was not sufficient time between them for the electric action to cease entirely. Consequently the line could not clear itself, and became surcharged, as it were; the effect being an attenuated prolongation of each impulse as manifested in a weaker continuation of the mark on the tape, thus making the whole message indistinct. These secondary marks were called "tailings."

For many years electricians had tried in vain to overcome this difficulty. Edison devoted a great deal of thought and energy to the question, in the course of which he experimented through one hundred and twenty consecutive nights, in the year 1873, on the line between New York and Washington. His solution of the problem was simple but effectual. It involved the principle of inductive compensation. In a shunt circuit with the receiving instrument he introduced electromagnets. The pulsations of current passed through the helices of these magnets, producing an augmented marking effect upon the receiving tape, but, upon the breaking of the current, the magnet, in discharging itself of the induced magnetism, would set up momentarily a counter-current of opposite polarity. This neutralized the "tailing" effect by clearing the line between pulsations, thus allowing the telegraphic characters to be clearly and distinctly outlined upon the tape. Further

elaboration of this method was made later by the addition of rheostats, condensers, and local opposition batteries on long lines.

The other difficulty above referred to was one that had also occupied considerable thought and attention of many workers in the field, and related to the perforating of the dash in the transmission tape. It involved mechanical complications that seemed to be insurmountable, and up to the time Edison invented his perforating machine no really good method was available. He abandoned the attempt to cut dashes, as such, in the paper tape, but instead punched three round holes so arranged as to form a triangle. A concrete example is presented in the illustration below, which shows a piece of tape with perforations representing the word "same."

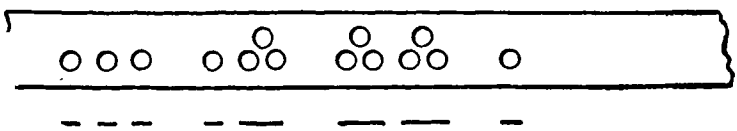

FIG. 3

The philosophy of this will be at once perceived when it is remembered that the two little wheels running upon the drum of the transmitting instrument were situated side by side, corresponding in distance to the two rows of holes. When a triangle of three holes, intended to form the dash, reached the wheels, one of them dropped into a lower hole. Before it could get out, the other wheel dropped into the hole at the apex of the triangle, thus continuing the connection, which was still further prolonged by the first wheel dropping into the third hole. Thus, an extended contact was made, which, by transmitting a long impulse, resulted in the marking of a dash upon the receiving tape.

This method was in successful commercial use for some time in the early seventies, giving a speed of from three to four thousand words a minute over a single line, but later on was superseded by Edison's Roman letter system, above referred to.

The subject of automatic telegraphy received a vast amount of attention from inventors at the time it was in

vogue. None was more earnest or indefatigable than Edison, who, during the progress of his investigations, took out thirty-eight patents on various inventions relating thereto, some of them covering chemical solutions for the receiving paper. This of itself was a subject of much importance, and a vast amount of research and labor was expended upon it. In the laboratory note-books there are recorded thousands of experiments showing that Edison's investigations not only included an enormous number of chemical salts and compounds, but also an exhaustive variety of plants, flowers, roots, herbs, and barks.

It seems inexplicable at first view that a system of telegraphy sufficiently rapid and economical to be practically available for important business correspondence should have fallen into disuse. This, however, is made clear—so far as concerns Edison's invention at any rate—in Chapter VIII of the preceding narrative.

IV

WIRELESS TELEGRAPHY

ALTHOUGH Mr. Edison has taken no active part in the development of the more modern wireless telegraphy, and his name has not occurred in connection therewith, the underlying phenomena had been noted by him many years in advance of the art, as will presently be explained. The authors believe that this explanation will reveal a status of Edison in relation to the subject that has thus far been unknown to the public.

While the term "wireless telegraphy," as now applied to the modern method of electrical communication between distant points without intervening conductors, is self-explanatory, it was also applicable, strictly speaking, to the previous art of telegraphing to and from moving trains, and between points not greatly remote from each other, and not connected together with wires.

The latter system (described in Chapter XXIII and in a succeeding article of this Appendix) was based upon the phenomena of electromagnetic or electrostatic induction between conductors separated by more or less space, whereby electric impulses of relatively low potential and low frequency set up in one conductor were transmitted inductively across the air to another conductor, and there received through the medium of appropriate instruments connected therewith.

As distinguished from this system, however, modern wireless telegraphy—so called—has its basis in the utilization of electric or ether waves in free space, such waves being set up by electric oscillations, or surgings, of comparatively high potential and high frequency, produced by the operation of suitable electrical apparatus. Broadly speaking, these oscillations arise from disruptive discharges of an induction

coil, or other form of oscillator, across an air-gap, and their character is controlled by the manipulation of a special type of circuit-breaking key, by means of which long and short discharges are produced. The electric or etheric waves thereby set up are detected and received by another special form of apparatus more or less distant, without any intervening wires or conductors.

In November, 1875, Edison, while experimenting in his Newark laboratory, discovered a new manifestation of electricity through mysterious sparks which could be produced under conditions unknown up to that time. Recognizing at once the absolutely unique character of the phenomena, he continued his investigations enthusiastically over two months, finally arriving at a correct conclusion as to the oscillatory nature of the hitherto unknown manifestations. Strange to say, however, the true import and practical applicability of these phenomena did not occur to his mind. Indeed, it was not until more than *twelve years afterward*, in 1887, upon the publication of the notable work of Prof. H. Hertz proving the existence of electric waves in free space, that Edison realized the fact that the fundamental principle of aerial telegraphy had been within his grasp in the winter of 1875; for although the work of Hertz was more profound and mathematical than that of Edison, the principle involved and the phenomena observed were practically identical—in fact, it may be remarked that some of the methods and experimental apparatus were quite similar, especially the "dark box" with micrometer adjustment, used by both in observing the spark.[1]

There is not the slightest intention on the part of the authors to detract in the least degree from the brilliant work of Hertz, but, on the contrary, to ascribe to him the honor that is his due in having given mathematical direction and certainty to so important a discovery. The adaptation of the principles thus elucidated and the subsequent development of the present wonderful art by Marconi, Branly,

[1] During the period in which Edison exhibited his lighting system at the Paris Exposition in 1881, his representative, Mr. Charles Batchelor, repeated Edison's remarkable experiments of the winter of 1875 for the benefit of a great number of European savants, using with other apparatus the original "dark box" with micrometer adjustment.

Lodge, Slaby, and others are now too well known to call for further remark at this place.

Strange to say, that although Edison's early experiments in "etheric force" called forth extensive comment and discussion in the public prints of the period, they seemed to have been generally overlooked when the work of Hertz was published. At a meeting of the Institution of Electrical Engineers, held in London on May 16, 1889, at which there was a discussion on the celebrated paper of Prof. (Sir) Oliver Lodge on "Lightning Conductors," however, the chairman, Sir William Thomson (Lord Kelvin), made the following remarks:

"We all know how Faraday made himself a cage six feet in diameter, hung it up in mid-air in the theatre of the Royal Institution, went into it, and, as he said, lived in it and made experiments. It was a cage with tin-foil hanging all round it; it was not a complete metallic enclosing shell. Faraday had a powerful machine working in the neighborhood, giving all varieties of gradual working-up and discharges by 'impulsive rush'; and whether it was a sudden discharge of ordinary insulated conductors, or of Leyden jars in the neighborhood outside the cage, or electrification and discharge of the cage itself, he saw no effects on his most delicate gold-leaf electroscopes in the interior. His attention was not directed to look for Hertz sparks, or probably he might have found them in the interior. Edison seems to have noticed something of the kind in what he called the etheric force. His name 'etheric' may, thirteen years ago, have seemed to many people absurd. But now we are all beginning to call these inductive phenomena 'etheric.'"

With these preliminary observations, let us now glance briefly at Edison's laboratory experiments, of which mention has been made.

On the first manifestation of the unusual phenomena in November, 1875, Edison's keenness of perception led him at once to believe that he had discovered a new force. Indeed, the earliest entry of this discovery in the laboratory note-book bore that caption. After a few days of further experiment and observation, however, he changed it to "Etheric Force," and the further records thereof (all in Mr. Batchelor's handwriting) were under that heading.

The publication of Edison's discovery created considerable attention at the time, calling forth a storm of general ridicule and incredulity. But a few scientific men of the period, whose experimental methods were careful and exact, corroborated his deductions after obtaining similar phenomena by repeating his experiments with intelligent precision. Among these was the late Dr. George M. Beard, a noted physicist, who entered enthusiastically into the investigation, and, in addition to a great deal of independent experiment, spent much time with Edison at his laboratory. Doctor Beard wrote a treatise of some length on the subject, in which he concurred with Edison's deduction that the phenomena were the manifestation of oscillations, or rapidly reversing waves of electricity, which did not respond to the usual tests. Edison had observed the tendency of this force to diffuse itself in various directions through the air and through matter, hence the name "Etheric" that he had provisionally applied to it.

Edison's laboratory notes on this striking investigation are fascinating and voluminous, but cannot be reproduced in full for lack of space. In view of the later practical application of the principles involved, however, the reader will probably be interested in perusing a few extracts therefrom, as illustrated by facsimiles of the original sketches from the laboratory note-book.

As the full significance of the experiments shown by these extracts may not be apparent to a lay reader, it may be stated by way of premise that, ordinarily, a current only follows a closed circuit. An electric bell or electric light is a familiar instance of this rule. There is in each case an open (wire) circuit which is closed by pressing the button or turning the switch, thus making a complete and uninterrupted path in which the current may travel and do its work. Until the time of Edison's investigations of 1875, now under consideration, electricity had never been known to manifest itself except through a closed circuit. But, as the reader will see from the following excerpts, Edison discovered a hitherto unknown phenomenon—namely, that under certain conditions the rule would be reversed and electricity would pass through space and through matter entirely unconnected with its point of origin. In other words, he had found the

forerunner of wireless telegraphy. Had he then realized the full import of his discovery, all he needed was to increase the strength of the waves and to provide a very sensitive detector, like the coherer, in order to have anticipated the principal developments that came many years afterward. With these explanatory observations, we will now turn to the excerpts referred to, which are as follows:

"November 22, 1875. New Force.—In experimenting with a vibrator magnet consisting of a bar of Stubb's steel fastened at one end and made to vibrate by means of a magnet, we noticed a spark coming from the cores of the magnet. This we have noticed often in relays, in stock-printers, when there were a little iron filings between the armature and core, and more often in our new electric pen, and we have always come to the conclusion that it was caused by strong induction. But when we noticed it on this vibrator it seemed so strong that it struck us forcibly there might be something more than induction. We now found that if we touched any metallic part of the vibrator or magnet we got the spark. The larger the body of iron touched to the vibrator the larger the spark. We now connected a wire to *X*, the end of the vibrating rod, and we found we could get a spark from it by touching a piece of iron to it, and one of the most curious phenomena is that if you turn

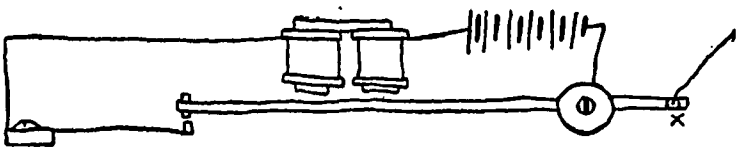

FIG. 1

the wire around on itself and let the point of the wire touch any other portion of itself you get a spark. By connecting *X* to the gas-pipe we drew sparks from the gas-pipes in any part of the room by drawing an iron wire over the brass jet of the cock. This is simply wonderful, and a good proof that the cause of the spark is a *true unknown force.*"

"November 23, 1875. New Force.—The following very curious result was obtained with it. The vibrator shown in

Fig. 1 and battery were placed on insulated stands, and a wire connected to *X* (tried both copper and iron) carried over to the stove about twenty feet distant. When the end of the wire was rubbed on the stove it gave out splendid sparks. When permanently connected to the stove, sparks could be drawn from the stove by a piece of wire held in the hand. The point *X* of vibrator was now connected to the gas-pipe and still the sparks could be drawn from the stove."

. . . . . .

"Put a coil of wire over the end of rod *X* and passed the ends of spool through galvanometer without affecting it in any way. Tried a 6-ohm spool and a 200-ohm. We now

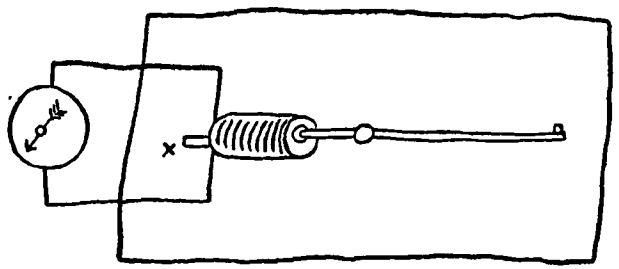

FIG. 2

tried all the metals, touching each one in turn to the point *X*." [Here follows a list of metals and the character of spark obtained with each.]

. . . . . .

"By increasing the battery from eight to twelve cells we get a spark when the vibrating magnet is shunted with 3" ohms. Cannot taste the least shock at *B*, yet between carbon points the spark is very vivid. As will be seen, *X* has no connection with anything. With a glass rod four feet long, well rubbed with a piece of silk over a hot stove, with a piece of battery carbon secured to one end, we received vivid sparks into the carbon when the other end was held in the hand with the handkerchief, yet the galvanometer, chemical

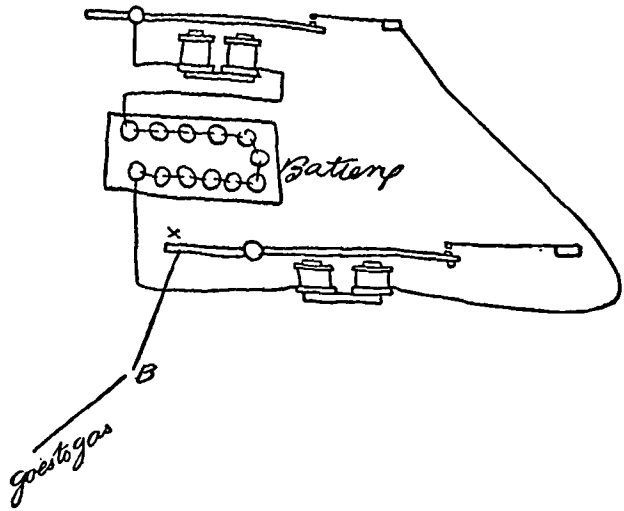

FIG. 3

paper, the sense of shock in the tongue, and a gold-leaf electroscope which would diverge at two feet from a half-inch spark plate-glass machine were not affected in the least by it.

"A piece of coal held to the wire showed faint sparks.

"We had a box made thus: whereby two points could be

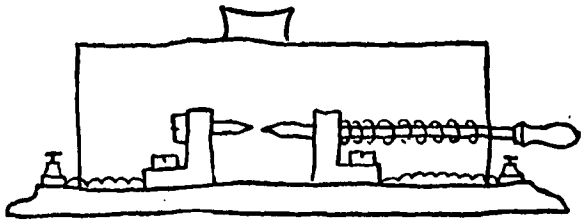

FIG. 4

brought together within a dark box provided with an eye-piece. The points were iron, and we found the sparks were very irregular. After testing some time two lead-pencils found more regular and very much more vivid. We then substituted the graphite points instead of iron."[1]

[1] The dark box had micrometer screws for delicate adjustment of the carbon points, and was thereafter largely used in this series of investigations for better

. . . . . .

After recording a considerable number of other experiments, the laboratory notes go on to state:

"November 30, 1875. Etheric Force.—We found the addition of battery to the Stubb's wire vibrator greatly increased the volume of spark. Several persons could obtain sparks from the gas-pipes at once, each spark being equal in volume and brilliancy to the spark drawn by a single person. . . . Edison now grasped the (gas) pipe, and with the other hand holding a piece of metal, he touched several other metallic substances, obtained sparks, showing that the force passed through his body."

. . . . . .

"December 3, 1875. Etheric Force.—Charley Edison hung to the gas-pipe with feet above the floor, and with a knife got a spark from the pipe he was hanging on. We now took the wire from the vibrator in one hand and stood on a block of paraffin eighteen inches square and six inches thick; holding a knife in the other hand, we drew sparks from the stove-pipe. We now tried the crucial test of passing the etheric current through the sciatic nerve of a frog just killed. Previous to trying, we tested its sensibility by the current from a single Bunsen cell. We put in resistance up to 500,000 ohms, and the twitching was still perceptible. We tried the induced current from our induction coil having one cell on primary, the spark jumping about one-fiftieth of an inch, the terminal of the secondary connected to the frog, and it straightened out with violence. We arranged frog's legs to pass etheric force through. We placed legs on an inverted beaker, and held the two ends of the wires on glass rods eight inches long. On connecting one to the sciatic nerve and the other to the fleshy part of the leg *no movement could be discerned*, although brilliant sparks could be ob-

study of the spark. When Mr. Edison's experiments were repeated by Mr. Batchelor, who represented him at the Paris Exposition of 1881, the dark box was employed for a similar purpose.

tained on the graphite points when the frog was in circuit. Doctor Beard was present when this was tried."

. . . . . .

"December 5, 1875. Etheric Force.—Three persons grasping hands and standing upon blocks of paraffin twelve inches square and six thick drew sparks from the adjoining stove when another person touched the sounder with any piece of metal. . . . A galvanoscopic frog giving contractions with one cell through two water rheostats was then placed in circuit. When the wires from the vibrator and the gas-pipe were connected, slight contractions were noted, sometimes very plain and marked, showing the apparent presence of electricity, which from the high insulation seemed improbable. Doctor Beard, who was present, inferred from the way the leg contracted that it moved on both opening and closing the circuit. To test this we disconnected the wire between the frog and battery, and placed, instead of a vibrating sounder, a simple Morse key and a sounder taking the 'etheric' from armature. The spark was now tested in dark box and found to be very strong. It was then connected to the nerves of the frog, *but no movement of any kind could be detected upon working the key*, although the brilliancy and power of the spark were undiminished. The thought then occurred to Edison that the movement of the frog was due to mechanical vibrations from the vibrator (which gives probably two hundred and fifty vibrations per second), passing through the wires and irritating the sensitive nerves of the frog. Upon disconnecting the battery wires and holding a tuning-fork giving three hundred and twenty-six vibrations per second to the base of the sounder, the vibrations over the wire made the frog contract nearly every time. . . . The contraction of the frog's legs may with considerable safety be said to be caused by these mechanical vibrations being transmitted through the conducting wires."

Edison thought that the longitudinal vibrations caused by the sounder produced a more marked effect, and proceeded to try out his theory. The very next entry in the laboratory note-book bears the same date as the above

(December 5, 1875), and is entitled "Longitudinal Vibrations," and reads as follows:

"We took a long iron wire one-sixteenth of an inch in diameter and rubbed it lengthways with a piece of leather with resin on for about three feet, backward and forward. About ten feet away we applied the wire to the back of the neck, and it gives a horrible sensation, showing the vibrations conducted through the wire."

. . . . . .

The following experiment illustrates notably the movement of the electric waves through free space:

"December 26, 1875. Etheric Force.—An experiment tried to-night gives a curious result. *A* is a vibrator; *B*, *C*, *D*, *E* are sheets of tin-foil hung on insulating stands. The sheets are about twelve by eight inches. *B* and *C* are

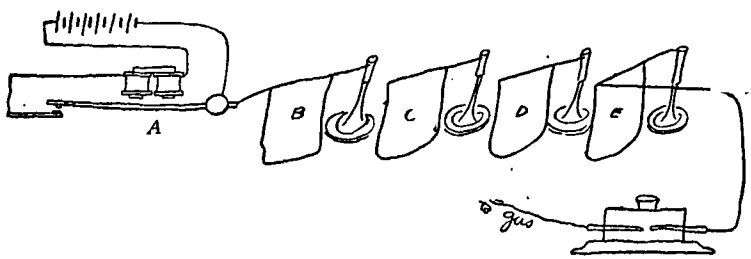

FIG. 5

twenty-six inches apart, *C* and *D* forty-eight inches, and *D* and *E* twenty-six inches. *B* is connected to the vibrator, and *E* to point in dark box, the other point to ground. We received sparks at intervals, although insulated by such space."

With the above our extracts must close, although we have given but a few of the interesting experiments tried at the time. It will be noticed, however, that these records show much progression in a little over a month. Just after the

item last above extracted, the Edison shop became greatly rushed on telegraphic inventions, and not many months afterward came the removal to Menlo Park; hence the etheric-force investigations were side-tracked for other matters deemed to be more important at that time.

Doctor Beard in his previously mentioned treatise refers, on page 27, to the views of others who have repeated Edison's experiments and observed the phenomena, and in a foot-note says:

"Professor Houston, of Philadelphia, among others, has repeated some of these physical experiments, has adopted in full and after but a partial study of the subject, the hypothesis of rapidly reversed electricity as suggested in my letter to the *Tribune* of December 9th, and further claims priority of discovery, because he observed the spark of this when experimenting with a Ruhmkorff coil four years ago. To this claim, if it be seriously entertained, the obvious reply is that thousands of persons, probably, had seen this spark before it was *discovered* by Mr. Edison; it had been seen by Professor Nipher, who supposed, and still supposes, it is the spark of the extra current; it has been seen by my friend, Prof. J. E. Smith, who assumed, as he tells me, without examination, that it was inductive electricity breaking through bad insulation; it had been seen, as has been stated, by Mr. Edison many times before he thought it worthy of study; it was undoubtedly seen by Professor Houston, who, like so many others, failed to even suspect its meaning and thus missed an important discovery. The honor of a scientific discovery belongs, not to him who first sees a thing, but to him who first sees it with expert eyes; not to him even who drops an original suggestion, but to him who first makes that suggestion fruitful of results. If to see with the eyes a phenomenon is to discover the law of which that phenomenon is a part, then every schoolboy who, before the time of Newton, ever saw an apple fall, was a discoverer of the law of gravitation. . . ."

Edison took out only one patent on long-distance telegraphy without wires. While the principle involved therein (induction) was not precisely analogous to the above, or to

the present system of wireless telegraphy, it was a step forward in the progress of the art. The application was filed May 23, 1885, at the time he was working on induction telegraphy (two years before the publication of the work of Hertz), but the patent (No. 465,971) was not issued until December 29, 1891. In 1903 it was purchased from him by the Marconi Wireless Telegraph Company. Edison has always had a great admiration for Marconi and his work, and a warm friendship exists between the two men. During the formative period of the Marconi Company attempts were made to influence Edison to sell this patent to an opposing concern, but his regard for Marconi and belief in the fundamental nature of his work were so strong that he refused flatly, because in the hands of an enemy the patent might be used inimically to Marconi's interests.

Edison's ideas, as expressed in the specifications of this patent, show very clearly the close analogy of his system to that now in vogue. As they were filed in the Patent Office several years before the possibility of wireless telegraphy was suspected, it will undoubtedly be of interest to give the following extract therefrom:

"I have discovered that if sufficient elevation be obtained to overcome the curvature of the earth's surface and to reduce to the minimum the earth's absorption, electric telegraphing or signalling between distant points can be carried on by induction without the use of wires connecting such distant points. This discovery is especially applicable to telegraphing across bodies of water, thus avoiding the use of submarine cables, or for communicating between vessels at sea, or between vessels at sea and points on land; but it is also applicable to electric communication between distant points on land, it being necessary, however, on land (with the exception of communication over open prairie) to increase the elevation in order to reduce to the minimum the induction-absorbing effect of houses, trees, and elevations in the land itself. At sea from an elevation of one hundred feet I can communicate electrically a great distance, and since this elevation or one sufficiently high can be had by utilizing the masts of ships, signals can be sent and received between ships separated a considerable distance, and by

repeating the signals from ship to ship communication can be established between points at any distance apart or across the largest seas and even oceans. The collision of ships in fogs can be prevented by this character of signalling, by the use of which, also, the safety of a ship in approaching a dangerous coast in foggy weather can be assured. In communicating between points on land, poles of great height can be used, or captive balloons. At these elevated points, whether upon the masts of ships, upon poles or balloons, condensing surfaces of metal or other conductor of electricity are located. Each condensing surface is connected with earth by an electrical conducting wire. On land this earth connection would be one of usual character in telegraphy. At sea the wire would run to one or more metal plates on the bottom of the vessel, where the earth connection would be made with the water. The high-resistance secondary circuit of an induction coil is located in circuit between the condensing surface and the ground. The primary circuit of

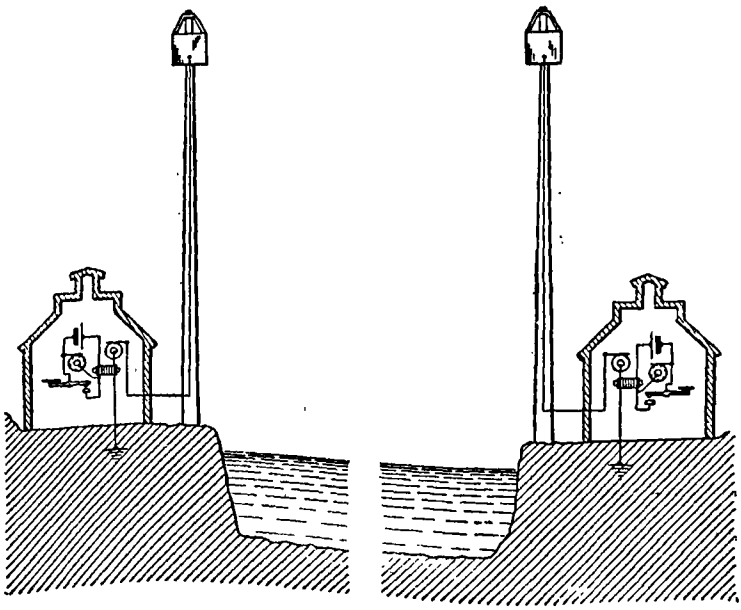

FIG. 6

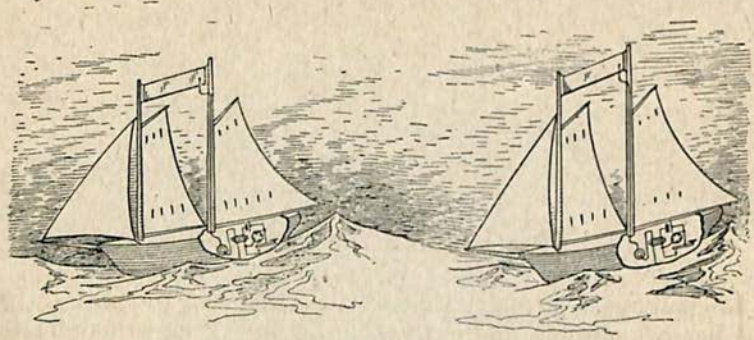

FIG. 7

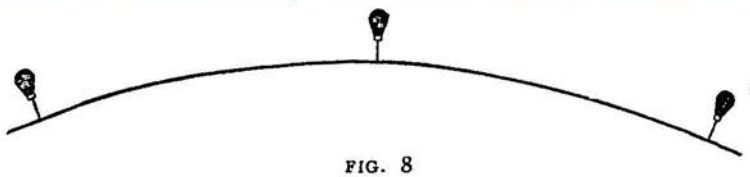

FIG. 8

the induction coil includes a battery and a device for transmitting signals, which may be a revolving circuit-breaker operated continually by a motor of any suitable kind, either electrical or mechanical, and a key normally short-circuiting the circuit-breaker or secondary coil. For receiving signals I locate in said circuit between the condensing surface and the ground a diaphragm sounder, which is preferably one of my electromotograph telephone receivers. The key normally short-circuiting the revolving circuit-breaker, no impulses are produced in the induction coil until the key is depressed, when a large number of impulses are produced in the primary, and by means of the secondary corresponding impulses or variations in tension are produced at the elevated condensing surface, producing thereat electrostatic impulses. These electrostatic impulses are transmitted inductively to the elevated condensing surface at the distant point, and are made audible by the electromotograph connected in the ground circuit with such distant condensing surface."

The accompanying illustrations are reduced facsimiles of the drawings attached to the above patent, No. 465,971.

V

THE ELECTROMOTOGRAPH

IN solving a problem that at the time was thought to be insurmountable, and in the adaptability of its principles to the successful overcoming of apparently insuperable difficulties subsequently arising in other lines of work, this invention is one of the most remarkable of the many that Edison has made in his long career as an inventor.

The object primarily sought to be accomplished was the repeating of telegraphic signals from a distance without the aid of a galvanometer or an electromagnetic relay, to overcome the claims of the Page patent referred to in the preceding narrative. This object was achieved in the device described in Edison's basic patent No. 158,787, issued January 19, 1875, by the substitution of friction and antifriction for the presence and absence of magnetism in a regulation relay.

It may be observed, parenthetically, for the benefit of the lay reader, that in telegraphy the device known as the relay is a receiving instrument containing an electromagnet adapted to respond to the weak line-current. Its armature moves in accordance with electrical impulses, or signals, transmitted from a distance, and, in so responding, operates mechanically to alternately close and open a separate local circuit in which there is a sounder and a powerful battery. When used for true relaying purposes the signals received from a distance are in turn repeated over the next section of the line, the powerful local battery furnishing current for this purpose. As this causes a loud repetition of the original signals, it will be seen that relaying is an economic method of extending a telegraph circuit beyond the natural limits of its battery power.

At the time of Edison's invention, as related in Chapter

IX of the preceding narrative, there existed no other known method than the one just described for the repetition of transmitted signals, thus limiting the application of telegraphy to the pleasure of those who might own any patent controlling the relay, except on simple circuits where a single battery was sufficient. Edison's previous discovery of differential friction of surfaces through electrochemical decomposition was now adapted by him to produce motion at the end of a circuit without the intervention of an electromagnet. In other words, he invented a telegraph instrument having a vibrator controlled by electrochemical decomposition, to take the place of a vibrating armature operated by an electromagnet, and thus opened an entirely new and unsuspected avenue in the art.

Edison's electromotograph comprised an ingeniously arranged apparatus in which two surfaces, normally in contact with each other, were caused to alternately adhere by friction or slip by reason of electrochemical decomposition. One of these surfaces consisted of a small drum or cylinder of chalk, which was kept in a moistened condition with a suitable chemical solution, and adapted to revolve continuously by clockwork. The other surface consisted of a small pad which rested with frictional pressure on the periphery of the drum. This pad was carried on the end of a vibrating arm whose lateral movement was limited between two adjustable points. Normally, the frictional pressure between the drum and pad would carry the latter with the former as it revolved, but if the friction were removed a spring on the end of the vibrator arm would draw it back to its starting-place.

In practice, the chalk drum was electrically connected with one pole of an incoming telegraph circuit, and the vibrating arm and pad with the other pole. When the drum rotated, the friction of the pad carried the vibrating arm forward, but an electrical impulse coming over the line would decompose the chemical solution with which the drum was moistened, causing an effect similar to lubrication, and thus allowing the pad to slip backward freely in response to the pull of its retractile spring. The frictional movements of the pad with the drum were comparatively long or short, and corresponded with the length of the impulses sent in over

the line. Thus, the transmission of Morse dots and dashes by the distant operator resulted in movements of corresponding length by the frictional pad and vibrating arm.

This brings us to the gist of the ingenious way in which Edison substituted the action of electrochemical decomposition for that of the electromagnet to operate a relay.

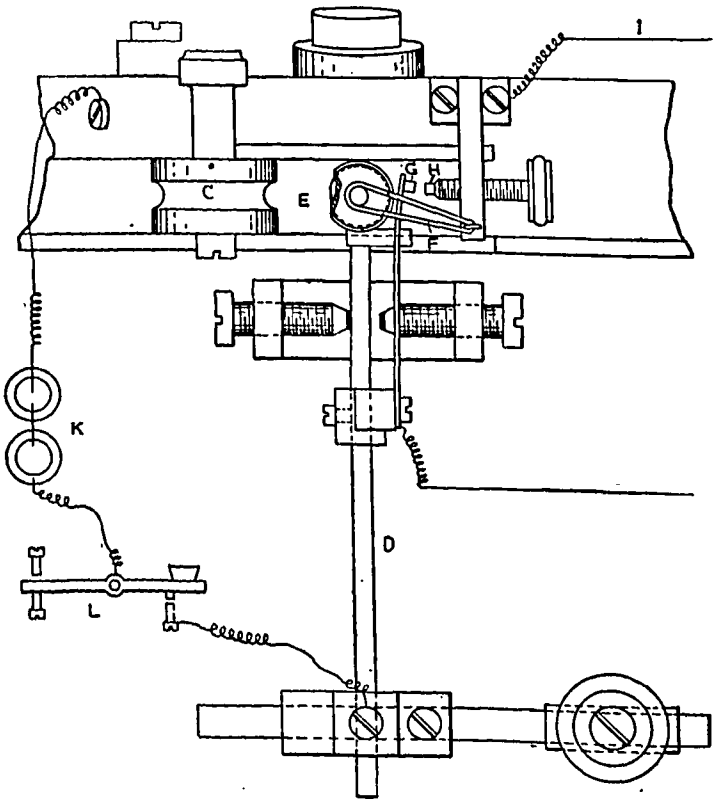

FIG. I

The actual relaying was accomplished through the medium of two contacts making connection with the local or relay circuit. One of these contacts was fixed, while the other was carried by the vibrating arm; and, as the latter made its forward and backward movements, these contacts were

alternately brought together or separated, thus throwing in and out of circuit the battery and sounder in the local circuit and causing a repetition of the incoming signals. The other side of the local circuit was permanently connected to an insulated block on the vibrator. This device not only worked with great rapidity, but was extremely sensitive, and would respond to currents too weak to affect the most delicate electromagnetic relay. It should be stated that Edison did not confine himself to the working of the electromotograph by the slipping of surfaces through the action of incoming current, but by varying the character of the surfaces in contact the frictional effect might be intensified by

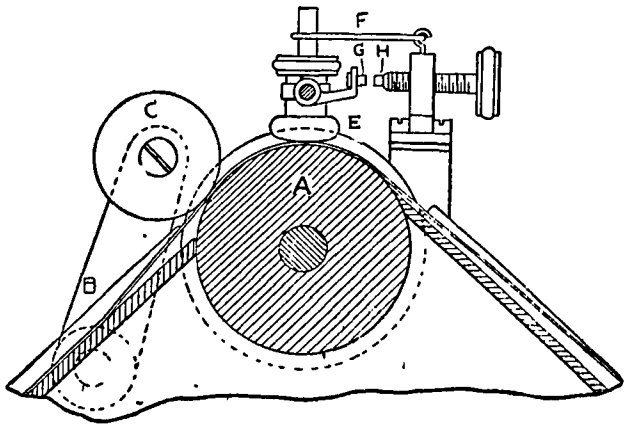

FIG. 2

the electrical current. In such a case the movements would be the reverse of those above indicated, but the end sought —namely, the relaying of messages—would be attained with the same certainty.

While the principal object of this invention was to accomplish the repetition of signals without the aid of an electromagnetic relay, the instrument devised by Edison was capable of use as a recorder also, by employing a small wheel inked by a fountain wheel and attached to the vibrating arm through suitable mechanism. By means of this adjunct the dashes and dots of the transmitted impulses could be recorded upon a paper ribbon passing continuously over the drum.

APPENDIX

The electromotograph is shown diagrammatically in Figs. 1 and 2, in plan and vertical section respectively. The reference letters in each case indicate identical parts: *A* being the chalk drum, *B* the paper tape, *C* the auxiliary cylinder, *D* the vibrating arm, *E* the frictional pad, *F* the spring, *G* and *H* the two contacts, *I* and *J* the two wires leading to local circuit, *K* a battery, and *L* an ordinary telegraph key. The two last named, *K* and *L*, are shown to make the

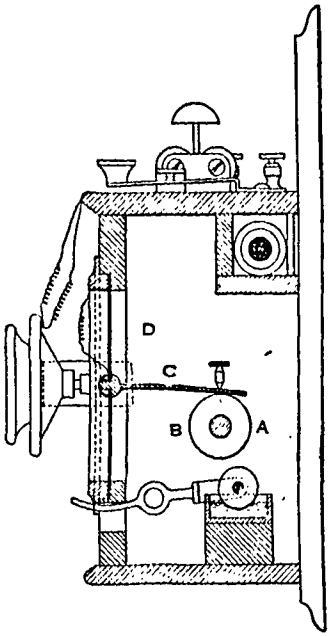

FIG. 3

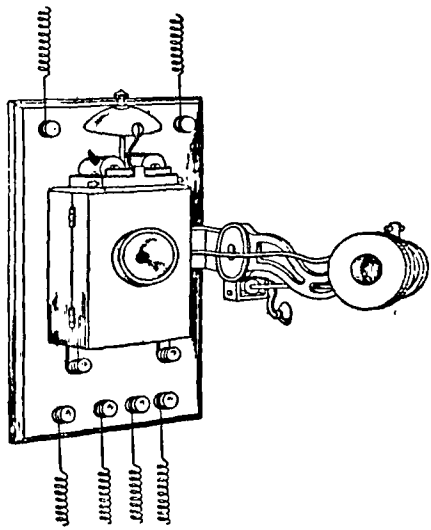

FIG. 4

sketch complete; but in practice would be at the transmitting end, which might be hundreds of miles away. It will be understood, of course, that the electromotograph is a receiving and relaying instrument.

Another notable use of the electromotograph principle was in its adaptation to the receiver in Edison's loud-speaking telephone, on which United States Patent No. 221,957 was issued November 25, 1879. A chalk cylinder moistened with a chemical solution was revolved by hand or a small

motor. Resting on the cylinder was a palladium-faced pen or spring, which was attached to a mica diaphragm in a resonator. The current passed from the main line through the pen to the chalk and to the battery. The sound-waves impinging upon the distant transmitter varied the resistance of the carbon button therein, thus causing corresponding variations in the strength of the battery current. These variations, passing through the chalk cylinder, produced more or less electrochemical decomposition, which in turn caused differences of adhesion between the pen and cylinder, and hence gave rise to mechanical vibrations of the diaphragm by reason of which the speaker's words were reproduced. Telephones so operated repeated speaking and singing in very loud tones. In one instance, spoken words and the singing of songs originating at a distance were heard perfectly by an audience of over five thousand people.

The loud-speaking telephone is shown in section, diagrammatically, in the sketch (Fig. 3), in which *A* is the chalk cylinder mounted on a shaft, *B*. The palladium-faced pen, or spring, *C*, is connected to diaphragm *D*. The instrument in its commercial form is shown in Fig. 4.

LIBRARY OF THE BOMBAY BRANCH OF THE ROYAL ASIATIC SOCIETY

VI

THE TELEPHONE

ON April 27, 1877, Edison filed in the United States Patent Office an application for a patent on a telephone, and on May 3, 1892, more than fifteen years afterward, Patent No. 474,230 was granted thereon. Numerous other patents have been issued to him for improvements in telephones, but the one above specified may be considered as the most important of them, since it is the one that first discloses the principle of the carbon transmitter.

This patent embodies but two claims, which are as follows:

"1. In a speaking-telegraph transmitter, the combination of a metallic diaphragm and disk of plumbago or equivalent material, the contiguous faces of said disk and diaphragm being in contact, substantially as described.

"2. As a means for effecting a varying surface contact in the circuit of a speaking-telegraph transmitter, the combination of two electrodes, one of plumbago or similar material, and both having broad surfaces in vibratory contact with each other, substantially as described."

The advance that was brought about by Edison's carbon transmitter will be more apparent if we glance first at the state of the art of telephony prior to his invention.

Bell was undoubtedly the first inventor of the art of transmitting speech over an electric circuit, but, with his particular form of telephone, the field was circumscribed. Bell's telephone is shown in the diagrammatic sectional sketch (Fig. 1).

In the drawing M is a bar magnet contained in the rubber case, L. A bobbin, or coil of wire, B, surrounds one end of the magnet. A diaphragm of soft iron is shown at D, and

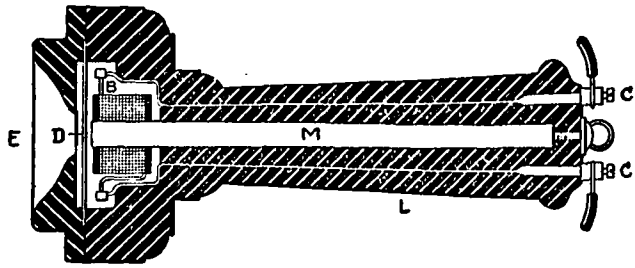

FIG. 1

E is the mouthpiece. The wire terminals of the coil, *B*, connect with the binding screws, *C C*.

The next illustration shows a pair of such telephones connected for use, the working parts only being designated by the above reference letters.

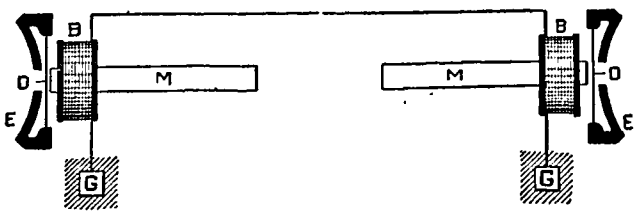

FIG. 2

It will be noted that the wire terminals are here put to their proper uses, two being joined together to form a line of communication, and the other two being respectively connected to "ground."

Now, if we imagine a person at each one of the instruments (Fig. 2) we shall find that when one of them speaks the sound vibrations impinge upon the diaphragm and cause it to act as a vibrating armature. By reason of its vibrations, this diaphragm induces very weak electric impluses in the magnetic coil. These impulses, according to Bell's theory, correspond in form to the sound-waves, and, passing over the line, energize the magnet coil at the receiving end, thus giving rise to corresponding variations in magnetism, by reason of which the receiving diaphragm is similarly vibrated so as to reproduce the sounds. A single apparatus

at each end is therefore sufficient, performing the double function of transmitter and receiver. It will be noticed that in this arrangement no battery is used. The strength of the impulses transmitted is therefore limited to that of the necessarily weak induction currents generated by the original sounds minus any loss arising by reason of resistance in the line.

Edison's carbon transmitter overcame this vital or limiting weakness by providing for independent power on the transmission circuit, and by introducing the principle of varying the resistance of that circuit with changes in the pressure. With Edison's telephone there is used a closed circuit on which a battery current constantly flows, and in that circuit is a pair of electrodes, one or both of which is carbon. These electrodes are always in contact with a certain initial pressure, so that current will be always flowing over the circuit. One of the electrodes is connected with the diaphragm on which the sound-waves impinge, and the vibrations of this diaphragm cause corresponding variations in pressure between the electrodes, and thereby effect similar variations in the current which is passing over the line to the receiving end. This current, flowing around the receiving magnet, causes corresponding impulses therein, which, acting upon its diaphragm, effect a reproduction of the original vibrations and hence of the original sounds.

In other words, the essential difference is that with Bell's telephone the sound-waves themselves generate the electric impulses, which are therefore extremely faint. With Edison's telephone the sound-waves simply actuate an electric valve, so to speak, and permit variations in a current of any desired strength.

A second distinction between the two telephones is this: With the Bell apparatus the very weak electric impulses generated by the vibration of the transmitting diaphragm pass over the entire line to the receiving end, and, in consequence, the possible length of line is limited to a few miles, even under ideal conditions. With Edison's telephone the battery current does not flow on the main line, but passes through the primary circuit of an induction-coil, from the secondary of which corresponding impulses of enormously higher potential are sent out on the main line to the receiving

end. In consequence, the line may be hundreds of miles in length. No modern telephone system is in use to-day that does not use these characteristic features: the varying resistance and the induction-coil. The system inaugurated by Edison is shown by the diagram (Fig. 3), in which the car-

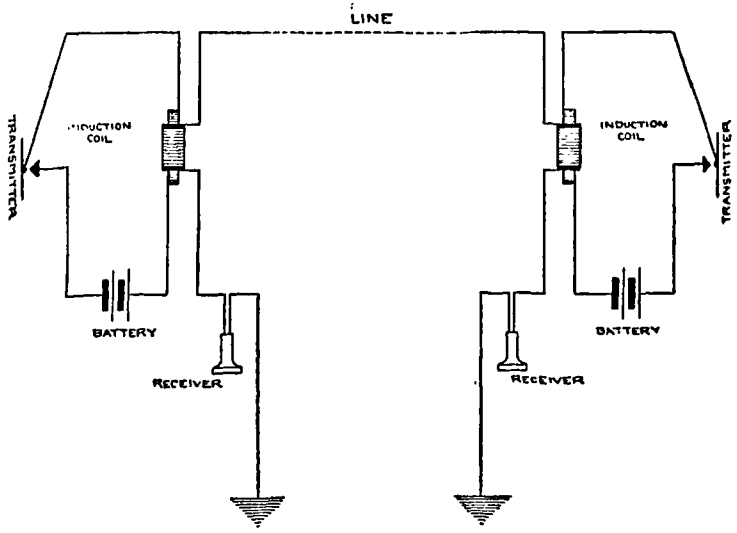

FIG. 3

bon transmitter, the induction-coil, the line, and the distant receiver are respectively indicated.

In Fig. 4 an early form of the Edison carbon transmitter is represented in sectional view.

The carbon disk is represented by the black portion, *E*, near the diaphragm, *A*, placed between two platinum plates, *D* and *G*, which are connected in the battery circuit, as shown by the lines. A small piece of rubber tubing, *B*, is attached to the centre of the metallic diaphragm, and presses lightly against an ivory piece, *F*, which is placed directly over one of the platinum plates. Whenever, therefore, any motion is given to the diaphragm, it is immediately followed by a corresponding pressure upon the carbon, and by a change of resistance in the latter, as described above.

It is interesting to note the position which Edison occupies in the telephone art from a legal standpoint. To this end

the reader's attention is called to a few extracts from a decision of Judge Brown in two suits brought in the United States Circuit Court, District of Massachusetts, by the American Bell Telephone Company against the National Telephone Manufacturing Company, *et al.*, and Century Telephone Company, *et al.*, reported in *Federal Reporter*, 109, page 976, *et seq.* These suits were brought on the Berliner patent, which, it was claimed, covered broadly the electrical transmission of speech by variations of pressure between opposing electrodes in constant contact. The Berliner patent was declared invalid, and in the course of a long and exhaustive opinion, in which the state of art and the work of Bell, Edison, Berliner, and others was fully discussed, the learned Judge made the following remarks: "The carbon electrode was the invention of Edison. . . . Edison preceded Berliner in the transmission of speech. . . . The carbon transmitter was an experimental invention of a very high order of merit. . . . Edison,

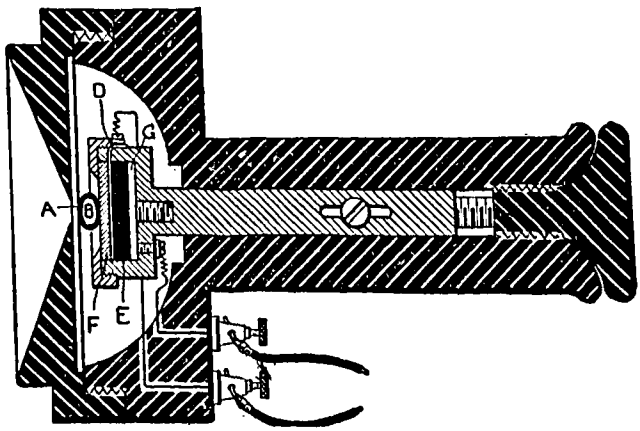

FIG. 4

by countless experiments, succeeded in advancing the art. . . . That Edison did produce speech with solid electrodes before Berliner is clearly proven. . . . The use of carbon in a transmitter is, beyond controversy, the invention of Edison. Edison was the first to make apparatus in which carbon was used as one of the electrodes. . . . The carbon transmitter displaced Bell's magnetic transmitter, and, under several

forms of construction, remains the only commercial instrument. . . . The advance in the art was due to the carbon electrode of Edison. . . . It is conceded that the Edison transmitter as apparatus is a very important invention. . . . An immense amount of painstaking and highly ingenious experiment preceded Edison's successful result. The discovery of the availability of carbon was unquestionably invention; and it resulted in the 'first practical success in the art.'"

VII

EDISON'S TASIMETER

THIS interesting and remarkable device is one of Edison's many inventions not generally known to the public at large, chiefly because the range of its application has been limited to the higher branches of science. He never applied for a patent on the instrument, but dedicated it to the public.

The device was primarily intended for use in detecting and measuring infinitesimal degrees of temperature, however remote, and its conception followed Edison's researches on the carbon telephone transmitter. Its principle depends upon the variable resistance of carbon in accordance with the degree of pressure to which it is subjected. By means of this instrument, pressures that are otherwise inappreciable and undiscoverable may be observed and indicated.

The detection of small variations of temperatures is brought about through the changes which heat or cold will produce in a sensitive material placed in contact with a carbon button, which is put in circuit with a battery and delicate galvanometer. In the sketch (Fig. 1) there is illustrated, partly in section, the form of tasimeter which Edison took with him to Rawlins, Wyoming, in July, 1878, on the expedition to observe the total eclipse of the sun.

The substance on whose expansion the working of the instrument depends is a strip of some material extremely sensitive to heat, such as vulcanite, shown at *A*, and firmly clamped at *B*. Its lower end fits into a slot in a metal plate, *C*, which in turn rests upon a carbon button. This latter and the metal plate are connected in an electric circuit which includes a battery and a sensitive galvanometer. A vulcanite or other strip is easily affected by differences of temperature, expanding and contracting by reason of the minutest changes. Thus, an infinitesimal variation in its length through expansion or contraction changes the press-

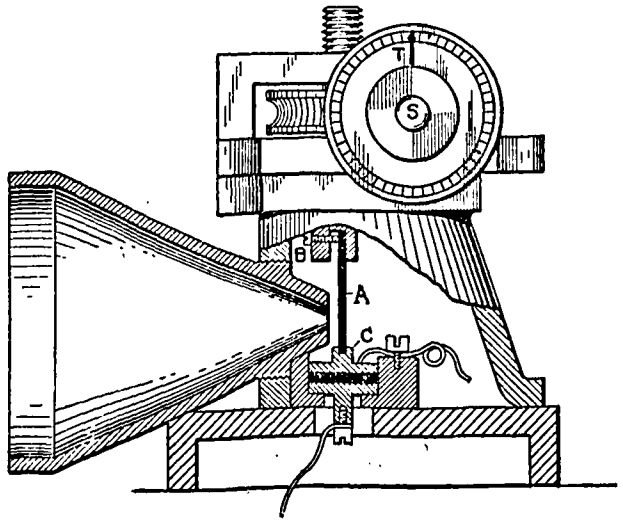

FIG. 1

ure on the carbon and affects the resistance of the circuit to a corresponding degree, thereby causing a deflection of the galvanometer; a movement of the needle in one direction denoting expansion, and in the other contraction. The strip, *A*, is first put under a slight pressure, deflecting the needle a few degrees from zero. Any subsequent expansion or contraction of the strip may readily be noted by further movements of the needle. In practice, and for measurements of a very delicate nature, the tasimeter is inserted in one arm of a Wheatstone bridge, as shown at *A* in the diagram (Fig. 2). The galvanometer is shown at *B* in the bridge wire, and at *C*, *D*, and *E* there are shown the resistances in the other arms of the bridge, which are adjusted to equal the resistance of the tasimeter circuit. The battery is shown at *F*. This arrangement tends to obviate any misleading deflections that might arise through changes in the battery.

The dial on the front of the instrument is intended to indicate the exact amount of physical expansion or contraction of the strip. This is ascertained by means of a micrometer screw, *S*, which moves a needle, *T*, in front of the dial. This screw engages with a second and similar screw which

is so arranged as to move the strip of vulcanite up or down. After a galvanometer deflection has been obtained through the expansion or contraction of the strip by reason of a change of temperature, a similar deflection is obtained mechanically by turning the screw, *S*, one way or the other. This causes the vulcanite strip to press more or less upon the carbon button, and thus produces the desired change in the resistance of the circuit. When the galvanometer shows the desired deflection, the needle, *T*, will indicate upon the dial, in decimal fractions of an inch, the exact distance through which the strip has been moved.

With such an instrument as the above, Edison demonstrated the existence of heat in the corona at the above-mentioned total eclipse of the sun, but exact determinations could not be made at that time, because the tasimeter adjustment was too delicate, and at the best the galvanometer deflections were so marked that they could not be kept within the limits of the scale. The sensitiveness of the instrument may be easily comprehended when it is stated that the heat of the hand thirty feet away from the cone-like funnel of the tasimeter will so affect the galvanometer as to cause the spot of light to leave the scale.

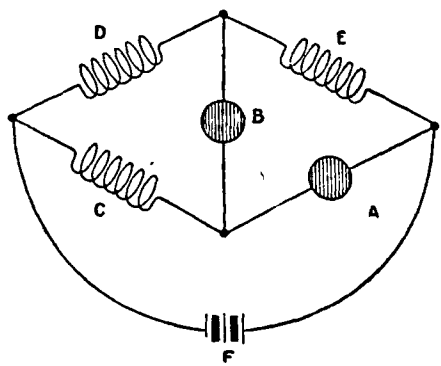

FIG. 2

This instrument can also be used to indicate minute changes of moisture in the air by substituting a strip of gelatine in place of the vulcanite. When so arranged a moistened piece of paper held several feet away will cause a minute expansion of the gelatine strip, which effects a pressure on the carbon, and causes a variation in the circuit sufficient to throw the spot of light from the galvanometer mirror off the scale.

The tasimeter has been used to demonstrate heat from remote stars (suns), such as Arcturus.

VIII

THE EDISON PHONOGRAPH

THE first patent that was ever granted on a device for permanently recording the human voice and other sounds, and for reproducing the same audibly at any future time, was United States Patent No. 200,251, issued to Thomas A. Edison on February 19, 1878, the application having been filed December 24, 1877. It is worthy of note that no references whatever were cited against the application while under examination in the Patent Office. This invention, therefore, marked the very beginning of an entirely new art, which, with the new industries attendant upon its development, has since grown to occupy a position of world-wide reputation.

That the invention was of a truly fundamental character is also evident from the fact that although all "talking-machines" of to-day differ very widely in refinement from the first crude but successful phonograph of Edison, their performance is absolutely dependent upon the employment of the principles stated by him in his Patent No. 200,251. Quoting from the specification attached to this patent, we find that Edison said:

"The invention consists in arranging a plate, diaphragm, or other flexible body capable of being vibrated by the human voice or other sounds, in conjunction with a material capable of registering the movements of such vibrating body by embossing or indenting or altering such material, in such a manner that such register marks will be sufficient to cause a second vibrating plate or body to be set in motion by them, and thus reproduce the motions of the first vibrating body."

It will be at once obvious that these words describe perfectly the basic principle of every modern phonograph or

other talking-machine, irrespective of its manufacture or trade name.

Edison's first model of the phonograph is shown in the following illustration.

It consisted of a metallic cylinder having a helical indenting groove cut upon it from end to end. This cylinder was mounted on a shaft supported on two standards. This shaft at one end was fitted with a handle, by means of which the cylinder was rotated. There were two diaphragms, one on each side of the cylinder, one being for recording and the other for reproducing speech or other sounds. Each diaphragm had attached to it a needle. By means of the needle attached to the recording diaphragm, indentations were made in a sheet of tin-foil stretched over the peripheral sur-

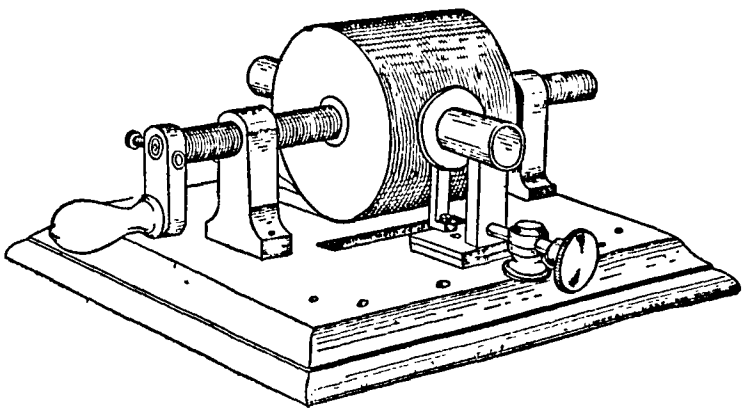

FIG. 1

face of the cylinder when the diaphragm was vibrated by reason of speech or other sounds. The needle on the other diaphragm subsequently followed these indentations, thus reproducing the original sounds.

Crude as this first model appears in comparison with machines of later development and refinement, it embodied their fundamental essentials, and was in fact a complete, practical phonograph from the first moment of its operation.

The next step toward the evolution of the improved phono-

graph of to-day was another form of tin-foil machine, as seen in the illustration (Fig. 2).

It will be noted that this was merely an elaborated form of the first model, and embodied several mechanical modifications, among which was the employment of only one

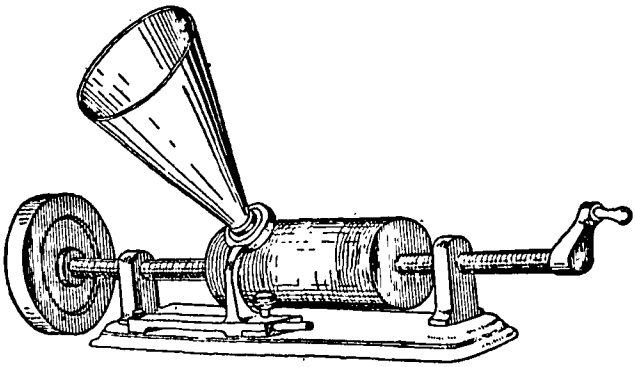

FIG. 2

diaphragm for recording and reproducing. Such was the general type of phonograph used for exhibition purposes in America and other countries in the three or four years immediately succeeding the date of this invention.

In operating the machine the recording diaphragm was advanced nearly to the cylinder, so that as the diaphragm was vibrated by the voice the needle would prick or indent a wave-like record in the tin-foil that was on the cylinder. The cylinder was constantly turned during the recording, and, in turning, was simultaneously moved forward. Thus the record would be formed on the tin-foil in a continuous spiral line. To reproduce this record it was only necessary to again start at the beginning and cause the needle to retrace its path in the spiral line. The needle, in passing rapidly in contact with the recorded waves, was vibrated up and down, causing corresponding vibrations of the diaphragm. In this way sound-waves similar to those caused by the original sounds would be set up in the air, thus reproducing the original speech.

The modern phonograph operates in a precisely similar way, the only difference being in details of refinement. In-

stead of tin-foil, a wax cylinder is employed, the record being *cut* thereon by a cutting-tool attached to a diaphragm, while the reproduction is effected by means of a blunt stylus similarly attached.

The cutting-tool and stylus are devices made of sapphire, a gem next in hardness to a diamond, and they have to be cut and formed to an exact nicety by means of diamond dust, most of the work being performed under high-powered microscopes. The minute proportions of these devices will be apparent by a glance at the accompanying illustrations, in which the object on the left represents a common pin, and the objects on the right the cutting-tool and reproducing stylus, all actual sizes.

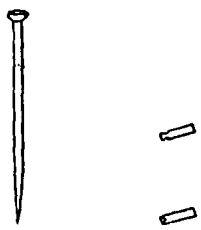

FIG. 3

In the next illustration (Fig. 4) there is shown in the upper sketch, greatly magnified, the cutting or recording tool in the act of forming the record, being vibrated rapidly by the diaphragm; and in the lower sketch, similarly enlarged, a representation of the stylus travelling over the record thus made, in the act of effecting a reproduction.

From the late summer of 1878 and to the fall of 1887 Edison was intensely busy on the electric light, electric railway, and other problems, and virtually gave no attention to the phonograph. Hence, just prior to the latter-named period the instrument was still in its tin-foil age; but he then began to devote serious attention to the development of an improved type that should be of greater commercial importance. The practical results are too well known to call for further comment. That his efforts were not limited in extent may be inferred from the fact that since the fall of 1887 to the present writing he has been granted in the United States one hun-

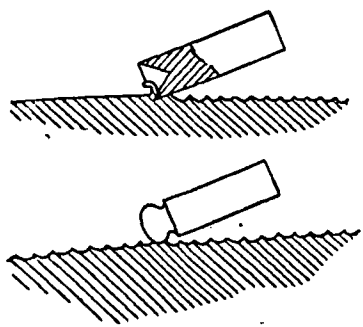

FIG. 4

dred and four patents relating to the phonograph and its accessories.

Interesting as the numerous inventions are, it would be a work of supererogation to digest all these patents in the present pages, as they represent not only the inception but also the gradual development and growth of the wax-record type of phonograph from its infancy to the present perfected machine and records now so widely known all over the world. From among these many inventions, however, we will select two or three as examples of ingenuity and importance in their bearing upon present perfection of results.

One of the difficulties of reproduction for many years was the trouble experienced in keeping the stylus in perfect en-

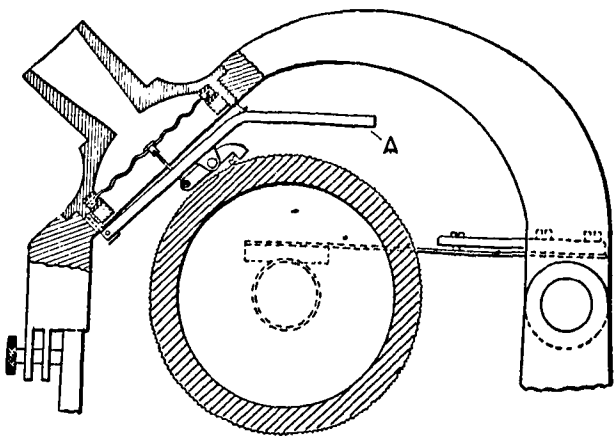

FIG. 5

gagement with the wave-like record, so that every minute vibration would be reproduced. It should be remembered that the deepest cut of the recording tool is only about one-third the thickness of tissue-paper. Hence, it will be quite apparent that the slightest inequality in the surface of the wax would be sufficient to cause false vibration, and thus give rise to distorted effects in such music or other sounds as were being reproduced. To remedy this, Edison added an attachment which is called a "floating weight," and is shown at *A* in the illustration above.

The function of the floating weight is to automatically keep

the stylus in close engagement with the record, thus insuring accuracy of reproduction. The weight presses the stylus to its work, but because of its mass it cannot respond to the extremely rapid vibrations of the stylus. They are therefore communicated to the diaphragm.

Some of Edison's most remarkable inventions are revealed in a number of interesting patents relating to the duplication of phonograph records. It would be obviously impossible, from a commercial standpoint, to obtain a musical record from a high-class artist and sell such an original to the public, as its cost might be from one hundred to several thousand dollars. Consequently, it is necessary to provide some way by which duplicates may be made cheaply enough to permit their purchase by the public at a reasonable price.

The making of a perfect original musical or other record is a matter of no small difficulty, as it requires special technical knowledge and skill gathered from many years of actual experience; but in the exact copying, or duplication, of such a record, with its many millions of microscopic waves and sub-waves, the difficulties are enormously increased. The duplicates must be microscopically identical with the original; they must be free from false vibrations or other defects, although both original and duplicates are of such easily defacable material as wax; and the process must be cheap and commercial, not a scientific laboratory possibility.

For making duplicates it was obviously necessary to first secure a mold carrying the record in negative or reversed form. From this could be molded, or cast, positive copies which would be identical with the original. While the art of electroplating would naturally suggest itself as the means of making such a mold, an apparently insurmountable obstacle appeared on the very threshold. Wax, being a non-conductor, cannot be electroplated unless a conducting surface be first applied. The coatings ordinarily used in electrodeposition were entirely out of the question on account of coarseness, the deepest waves of the record being less than one-thousandth of an inch in depth, and many of them probably ten to one hundred times as shallow. Edison finally decided to apply a preliminary metallic coating of infinitesimal thinness, and accomplished this object by a remarkable process known as the vacuous deposit. With this he ap-

plied to the original record a film of gold probably no thicker than one three-hundred-thousandth of an inch, or several hundred times less than the depth of an average wave. Three hundred such layers placed one on top of the other would make a sheet no thicker than tissue-paper.

The process consists in placing in a vacuum two leaves, or electrodes, of gold, and between them the original record. A constant discharge of electricity of high tension between the electrodes is effected by means of an induction-coil. The metal is vaporized by this discharge, and is carried by it directly toward and deposited upon the original record, thus forming the minute film of gold above mentioned. The record is constantly rotated until its entire surface is coated. A sectional diagram of the apparatus (Fig. 6.) will aid to a clearer understanding of this ingenious process.

After the gold film is formed in the manner described above, a heavy backing of baser metal is electroplated upon it, thus forming a substantial mold, from which the original record is extracted by breakage or shrinkage.

Duplicate records in any quantity may now be made from this mold by surrounding it with a cold-water jacket and dipping it in a molten wax-like material. This congeals on the record surface just as melted butter would collect on a cold knife, and when the mold is removed the surplus wax falls out, leaving a heavy deposit of the material which forms the duplicate record. Numerous ingenious inventions have been made by Edison providing for a variety of rapid and economical methods of duplication, including methods of shrinking a newly made copy to facilitate its quick removal from the mold; methods of reaming, of forming ribs on the interior, and for many other important and essential details, which limits of space will not permit of elaboration. Those mentioned above are but fair examples of the persistent and effective work he has done to bring the phonograph to its present state of perfection.

In perusing Chapter X of the foregoing narrative, the reader undoubtedly noted Edison's clear apprehension of the practical uses of the phonograph, as evidenced by his prophetic utterances in the article written by him for the *North American Review* in June, 1878. In view of the crudity of the instrument at that time, it must be acknowl-

APPENDIX

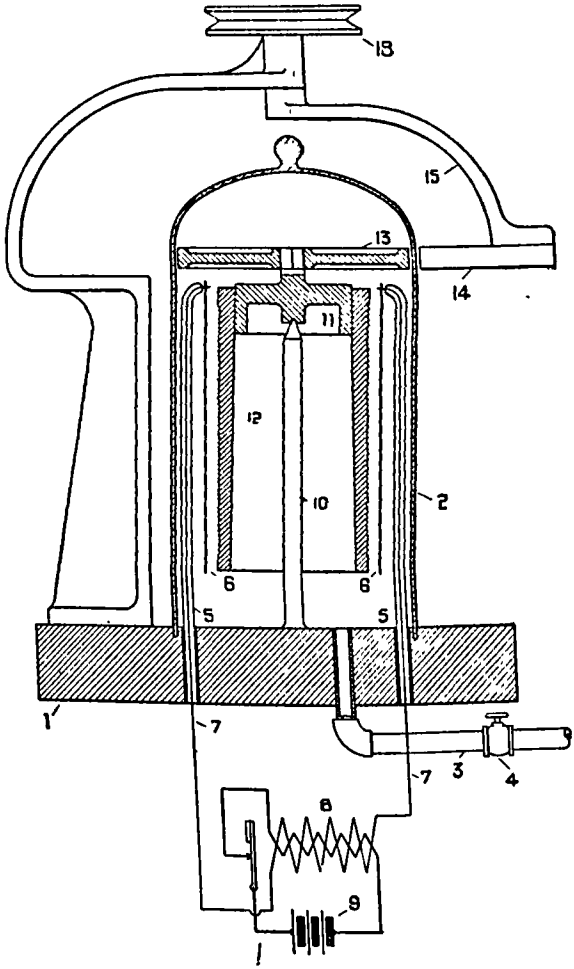

FIG. 6

1, base: 2, vacuum chamber or jar; 3, pipe for creating vacuum. 4, valve; 5, glass tubes which serve as arms for supporting gold leaves (6); 7, conductors leading from induction-coil (8), through glass tubes, and connecting with gold leaves: 9, battery for coil; 10, spindle upon which record holder (11) revolves; 12, record; 13, iron or steel armature carried by 11; 14, exterior magnet attached to arm (15), and rotated by pulley (18) by means of belt attached to motor.

edged that Edison's foresight, as vindicated by later events, was most remarkable. No less remarkable was his intensely practical grasp of mechanical possibilities of future types of the machine, for we find in one of his early English patents, (No. 1644 of 1878) the disk form of phonograph which, some ten to fifteen years later, was supposed to be a new development in the art. This disk form was also covered by Edison's application for a United States patent, filed in 1879. This application met with some merely minor technical objections in the Patent Office, and seems to have passed into the "abandoned" class for want of prosecution, probably because of being overlooked in the tremendous pressure arising from his development of his electric-lighting system.

IX

THE INCANDESCENT LAMP

ALTHOUGH Edison's contributions to human comfort and progress are extensive in number and extraordinarily vast and comprehensive in scope and variety, the universal verdict of the world points to his incandescent lamp and system of distribution of electrical current as the central and crowning achievements of his life up to this time. This view would seem entirely justifiable when we consider the wonderful changes in the conditions of modern life that have been brought about by the wide-spread employment of these inventions, and the gigantic industries that have grown up and been nourished by their world-wide application. That he was in this instance a true pioneer and creator is evident as we consider the subject, for the United States Patent No. 223,898, issued to Edison on January 27, 1880, for an incandescent lamp, was of such fundamental character that it opened up an entirely new and tremendously important art—the art of incandescent electric lighting. This statement cannot be successfully controverted, for it has been abundantly verified after many years of costly litigation. If further proof were desired, it is only necessary to point to the fact that, after thirty years of most strenuous and practical application in the art by the keenest intellects of the world, every incandescent lamp that has ever since been made, including those of modern days, is still dependent upon the employment of the essentials disclosed in the above-named patent—namely, a filament of high resistance enclosed in a sealed glass globe exhausted of air, with conducting wires passing through the glass.

An incandescent lamp is such a simple-appearing article—merely a filament sealed into a glass globe—that its intrinsic relation to the art of electric lighting is far from being ap-

parent at sight. To the lay mind it would seem that this must have been *the* obvious device to make in order to obtain electric light by incandescence of carbon or other material. But the reader has already learned from the preceding narrative that prior to its invention by Edison such a device was *not* obvious, even to the most highly trained experts of the world at that period; indeed, it was so far from being obvious that, for some time after he had completed practical lamps and was actually lighting them up twenty-four hours a day, such a device and such a result were declared by these same experts to be an utter impossibility. For a short while the world outside of Menlo Park held Edison's claims in derision. His lamp was pronounced a fake, a myth, possibly a momentary success magnified to the dignity of a permanent device by an overenthusiastic inventor.

Such criticism, however, did not disturb Edison. He *knew* that he had reached the goal. Long ago, by a close process of reasoning, he had clearly seen that the only road to it was through the path he had travelled, and which was now embodied in the philosophy of his incandescent lamp—namely, a filament, or carbon, of high resistance and small radiating surface, sealed into a glass globe exhausted of air to a high degree of vacuum. In originally committing himself to this line of investigation he was well aware that he was going in a direction diametrically opposite to that followed by previous investigators. Their efforts had been confined to low-resistance burners of large radiating surface for their lamps, but he realized the utter futility of such devices. The tremendous problems of heat and the prohibitive quantities of copper that would be required for conductors for such lamps would be absolutely out of the question in commercial practice.

He was convinced from the first that the true solution of the problem lay in a lamp which should have as its illuminating body a strip of material which would offer such a resistance to the flow of electric current that it could be raised to a high temperature—incandescence—and be of such small cross-section that it would radiate but little heat. At the same time such a lamp must require a relatively small amount of current, in order that comparatively small conductors could be used, and its burner must be capable of withstand-

ing the necessarily high temperatures without disintegration.

It is interesting to note that these conceptions were in Edison's mind at an early period of his investigations, when the best expert opinion was that the subdivision of the electric current was an *ignis fatuus*. Hence we quote the following notes he made, November 15, 1878, in one of the laboratory note-books:

"A given straight wire having 1 ohm resistance and certain length is brought to a given degree of temperature by given battery. If the same wire be coiled in such a manner that but one-quarter of its surface radiates, its temperature will be increased four times with the same battery, or, one-quarter of this battery will bring it to the temperature of straight wire. Or the same given battery will bring a wire whose total resistance is 4 ohms to the same temperature as straight wire.

"This was actually determined by trial.

"The amount of heat lost by a body is in proportion to the radiating surface of that body. If one square inch of platina be heated to 100° it will fall to, say, zero in one second, whereas, if it was at 200° it would require two seconds.

"Hence, in the case of incandescent conductors, if the radiating surface be twelve inches and the temperature on each inch be 100, or 1200 for all, if it is so coiled or arranged that there is but one-quarter, or three inches, of radiating surface, then the temperature on each inch will be 400. If reduced to three-quarters of an inch it will have on that three-quarters of an inch 1600° Fahr., notwithstanding the original total amount was but 1200, because the radiation has been reduced to three-quarters, or 75 units; hence, the effect of the lessening of the radiation is to raise the temperature of each remaining inch not radiating to 125°. If the radiating surface should be reduced to three-thirty-seconds of an inch, the temperature would reach 6400° Fahr. To carry out this law to the best advantage in regard to platina, etc., then with a given length of wire to quadruple the heat we must lessen the radiating surface to one-quarter, and to do this in a spiral, three-quarters must be within the spiral and one-quarter outside for radiating; hence, a square wire or other means,

such as a spiral within a spiral, must be used. These results account for the enormous temperature of the Electric Arc with one horse-power; as, for instance, if one horse-power will heat twelve inches of wire to 1000° Fahr., and this is concentrated to have one-quarter of the radiating surface, it would reach a temperature of 4000° or sufficient to melt it; but, supposing it infusible, the further concentration to one-eighth its surface, it would reach a temperature of 16,000°, and to one-thirty-second its surface, which would be about the radiating surface of the Electric Arc, it would reach 64,000° Fahr. Of course, when Light is radiated in great quantities not quite these temperatures would be reached.

"Another curious law is this: It will require a greater initial battery to bring an iron wire of the same size and resistance to a given temperature than it will a platina wire in proportion to their specific heats, and in the case of Carbon, a piece of Carbon three inches long and one-eighth diameter, with a resistance of 1 ohm, will require a greater battery power to bring it to a given temperature than a cylinder of thin platina foil of the same length, diameter, and resistance, because the specific heat of Carbon is many times greater; besides, if I am not mistaken, the radiation of a roughened body for heat is greater than a polished one like platina."

Proceeding logically upon these lines of thought and following them out through many ramifications, we have seen how he at length made a filament of carbon of high resistance and small radiating surface, and through a concurrent investigation of the phenomena of high vacua and occluded gases was able to produce a true incandescent lamp. Not only was it a lamp as a mere article—a device to give light—but it was also an integral part of his great and complete system of lighting, to every part of which it bore a fixed and definite ratio, and in relation to which it was the keystone that held the structure firmly in place.

The work of Edison on incandescent lamps did not stop at this fundamental invention, but extended through more than eighteen years of a most intense portion of his busy life. During that period he was granted one hundred and forty-nine other patents on the lamp and its manufacture. Although very many of these inventions were of the utmost

importance and value, we cannot attempt to offer a detailed exposition of them in this necessarily brief article, but must refer the reader, if interested, to the patents themselves, a full list being given at the end of this Appendix.

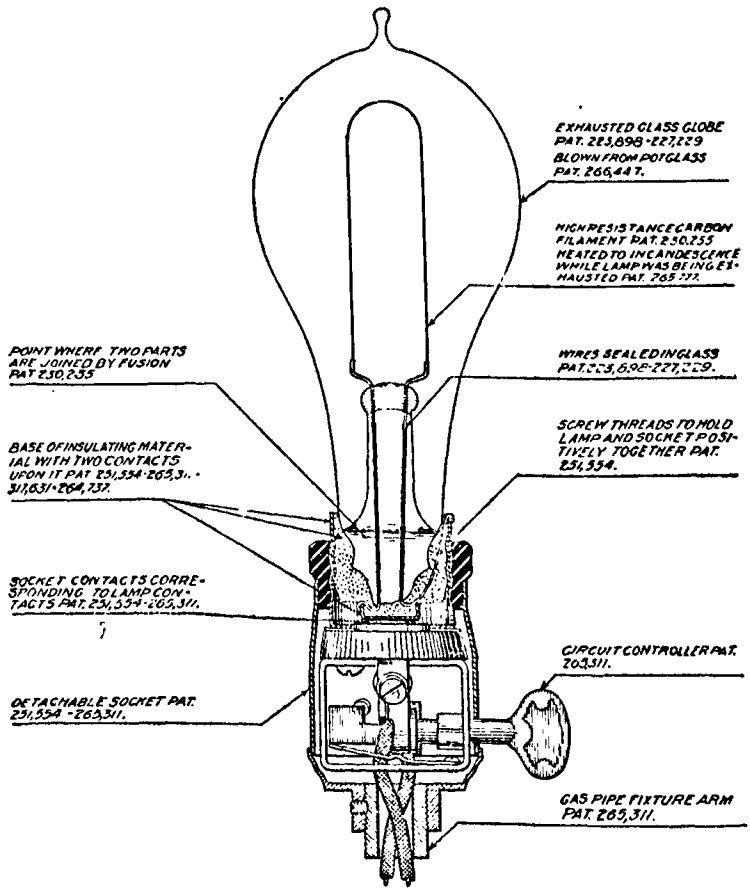
EXHAUSTED GLASS GLOBE PAT. 283,898-227,229 BLOWN FROM POT GLASS PAT. 266,447.
HIGH RESISTANCE CARBON FILAMENT PAT. 250,255 HEATED TO INCANDESCENCE WHILE LAMP WAS BEING EXHAUSTED PAT. 265,777.
POINT WHERE TWO PARTS ARE JOINED BY FUSION PAT. 230,255
WIRES SEALED IN GLASS PAT. 223,698-227,229.
BASE OF INSULATING MATERIAL WITH TWO CONTACTS UPON IT PAT. 251,554-265,311-311,631-264,737.
SCREW THREADS TO HOLD LAMP AND SOCKET POSITIVELY TOGETHER PAT. 251,554.
SOCKET CONTACTS CORRESPONDING TO LAMP CONTACTS PAT. 251,554-265,311.
CIRCUIT CONTROLLER PAT. 203,311.
DETACHABLE SOCKET PAT. 251,554-265,311.
GAS PIPE FIXTURE ARM PAT. 265,311.

FIG. 1

The outline sketch will indicate the principal patents covering the basic features of the lamp.

The litigation on the Edison lamp patents was one of the most determined and stubbornly fought contests in the history of modern jurisprudence. Vast interests were at

stake. All of the technical, expert, and professional skill and knowledge that money could procure or experience devise were availed of in the bitter fights that raged in the courts for many years. And although the Edison interests had spent from first to last nearly $2,000,000, and had only about three years left in the life of the fundamental patent, Edison was thoroughly sustained as to priority by the decisions in the various suits. We shall offer a few brief extracts from some of these decisions.

In a suit against the United States Electric Lighting Company, United States Circuit Court for the Southern District of New York, July 14, 1891, Judge Wallace said, in his opinion: "The futility of hoping to maintain a burner in vacuo with any permanency had discouraged prior inventors, and Mr. Edison is entitled to the credit of obviating the mechanical difficulties which disheartened them. . . . He was the first to make a carbon of materials, and by a process which was especially designed to impart high specific resistance to it; the first to make a carbon in the special form for the special purpose of imparting to it high total resistance; and the first to combine such a burner with the necessary adjuncts of lamp construction to prevent its disintegration and give it sufficiently long life. By doing these things he made a lamp which was practically operative and successful, the embryo of the best lamps now in commercial use, and but for which the subdivision of the electric light by incandescence would still be nothing but the *ignis fatuus* which it was proclaimed to be in 1879 by some of the learned experts who are now witnesses to belittle his achievement and show that it did not rise to the dignity of an invention. . . . It is impossible to resist the conclusion that the invention of the slender thread of carbon as a substitute for the burners previously employed opened the path to the practical subdivision of the electric light."

An appeal was taken in the above suit to the United States Circuit Court of Appeals, and on October 4, 1892, the decree of the lower court was affirmed. The judges (Lacombe and Shipman), in a long opinion reviewed the facts and the art, and said, *inter alia:* "Edison's invention was practically made when he ascertained the theretofore unknown fact that carbon would stand high temperature, even when very at-

tenuated, if operated in a high vacuum, without the phenomenon of disintegration. This fact he utilized by the means which he has described, a lamp having a filamentary carbon burner in a nearly perfect vacuum."

In a suit against the Boston Incandescent Lamp Company *et al.*, in the United States Circuit Court for the District of Massachusetts, decided in favor of Edison on June 11, 1894, Judge Colt, in his opinion, said, among other things: "Edison made an important invention; he produced the first practical incandescent electric lamp; the patent is a pioneer in the sense of the patent law; it may be said that his invention created the art of incandescent electric lighting."

Opinions of other courts, similar in tenor to the foregoing, might be cited, but it would be merely in the nature of reiteration. The above are sufficient to illustrate the direct clearness of judicial decision on Edison's position as the founder of the art of electric lighting by incandescence.

X

EDISON'S DYNAMO WORK

AT the present writing, when, after the phenomenally rapid electrical development of thirty years, we find on the market a great variety of modern forms of efficient current generators advertised under the names of different inventors (none, however, bearing the name of Edison), a young electrical engineer of the present generation might well inquire whether the great inventor had ever contributed anything to the art beyond a mere *type* of machine formerly made and bearing his name, but not now marketed except second hand.

For adequate information he might search in vain the books usually regarded as authorities on the subject of dynamo-electric machinery, for with slight exceptions there has been a singular unanimity in the omission of writers to give Edison credit for his great and basic contributions to heavy-current technics, although they have been universally acknowledged by scientific and practical men to have laid the foundation for the efficiency of, and to be embodied in, all modern generators of current.

It might naturally be expected that the essential facts of Edison's work would appear on the face of his numerous patents on dynamo-electric machinery, but such is not necessarily the case, unless they are carefully studied in the light of the state of the art as it existed at the time. While some of these patents (especially the earlier ones) cover specific devices embodying fundamental principles that not only survive to the present day, but actually lie at the foundation of the art as it now exists, there is no revelation therein of Edison's preceding studies of magnets, which extended over many years, nor of his later systematic investigations and deductions.

Dynamo-electric machines of a primitive kind had been

invented and were in use to a very limited extent for arc lighting and electroplating for some years prior to the summer of 1879, when Edison, with an embryonic lighting *system* in mind, cast about for a type of machine technically and commercially suitable for the successful carrying out of his plans. He found absolutely none. On the contrary, all of the few types then obtainable were uneconomical, indeed wasteful, in regard to efficiency. The art, if indeed there can be said to have been an art at that time, was in chaotic confusion, and only because of Edison's many years' study of the magnet was he enabled to conclude that insufficiency in quantity of iron in the magnets of such machines, together with poor surface contacts, rendered the cost of magnetization abnormally high. The heating of solid armatures, the only kind then known, and poor insulation in the commutators, also gave rise to serious losses. But perhaps the most serious drawback lay in the high-resistance armature, based upon the highest scientific dictum of the time that in order to obtain the maximum amount of work from a machine, the internal resistance of the armature must equal the resistance of the exterior circuit, although the application of this principle entailed the useless expenditure of at least 50 per cent. of the applied energy.

It seems almost incredible that only a little over thirty years ago the sum of scientific knowledge in regard to dynamo-electric machines was so meagre that the experts of the period should settle upon such a dictum as this, but such was the fact, as will presently appear. Mechanical generators of electricity were comparatively new at that time; their theory and practice were very imperfectly understood; indeed, it is quite within the bounds of truth to say that the correct principles were befogged by reason of the lack of practical knowledge of their actual use. Electricians and scientists of the period had been accustomed for many years past to look to the chemical battery as the source from which to obtain electrical energy; and in the practical application of such energy to telegraphy and kindred uses, much thought and ingenuity had been expended in studying combinations of connecting such cells so as to get the best results. In the text-books of the period it was stated as a settled principle that, in order to obtain the maximum

work out of a set of batteries, the internal resistance *must* approximately equal the resistance of the exterior circuit. This principle and its application in practice were quite correct as regards chemical batteries, but not as regards dynamo machines. Both were generators of electrical current, but so different in construction and operation, that rules applicable to the practical use of the one did not apply with proper commercial efficiency to the other. At the period under consideration, which may be said to have been just before dawn of the day of electric light, the philosophy of the dynamo was seen only in mysterious, hazy outlines—just emerging from the darkness of departing night. Perhaps it is not surprising, then, that the dynamo was loosely regarded by electricians as the practical equivalent of a chemical battery; that many of the characteristics of performance of the chemical cell were also attributed to it; and that if the maximum work could be gotten out of a set of batteries when the internal and external resistances were equal (and this was commercially the best thing to do), so must it be also with a dynamo.

It was by no miracle that Edison was far and away ahead of his time when he undertook to improve the dynamo. He was possessed of absolute *knowledge* far beyond that of his contemporaries. This he ad acquired by the hardest kind of work and incessant experiment with magnets of all kinds during several years preceding, particularly in connection with his study of automatic telegraphy. His knowledge of magnets was tremendous. He had studied and experimented with electromagnets in enormous variety, and knew their peculiarities in charge and discharge, lag, self-induction, static effects, condenser effects, and the various other phenomena connected therewith. He had also made collateral studies of iron, steel, and copper, insulation, winding, etc. Hence, by reason of this extensive work and knowledge, Edison was naturally in a position to realize the utter commercial impossibility of the then best dynamo machine in existence, which had an efficiency of only about 40 per cent., and was constructed on the "cut-and-try" principle.

He was also naturally in a position to assume the task he set out to accomplish, of undertaking to plan and build an improved type of machine that should be commercial in hav-

ing an efficiency of at least 90 per cent. Truly a prodigious undertaking in those dark days, when from the standpoint of Edison's large experience the most practical and correct electrical treatise was contained in the *Encyclopædia Britannica*, and in a German publication which Mr. Upton had brought with him after he had finished his studies with the illustrious Helmholtz. It was at this period that Mr. Upton commenced his association with Edison, bringing to the great work the very latest scientific views and the assistance of the higher mathematics, to which he had devoted his attention for several years previously.

As some account of Edison's investigations in this connection has already been given in Chapter XII of the narrative, we shall not enlarge upon them here, but quote from *An Historical Review*, by Charles L. Clarke, Laboratory Assistant at Menlo Park, 1880-81; Chief Engineer of the Edison Electric Light Company, 1881–84:

"In June, 1879, was published the account of the Edison dynamo-electric machine that survived in the art. This machine went into extensive commercial use, and was notable for its very massive and powerful field-magnets and armature of extremely low resistance as compared with the combined external resistance of the supply-mains and lamps. By means of the large masses of iron in the field-magnets, and closely fitted joints between the several parts thereof, the magnetic resistance (reluctance) of the iron parts of the magnetic circuit was reduced to a minimum, and the required magnetization effected with the maximum economy. At the same time Mr. Edison announced the commercial necessity of having the armature of the dynamo of low resistance, as compared with the external resistance, in order that a large percentage of the electrical energy developed should be utilized in the lamps, and only a small percentage lost in the armature, albeit this procedure reduced the total generating capacity of the machine. He also proposed to make the resistance of the supply-mains small, as compared with the combined resistance of the lamps in multiple arc, in order to still further increase the percentage of energy utilized in the lamps. And likewise to this end the combined resistance of the generator armatures in multiple arc

was kept relatively small by adjusting the number of generators operating in multiple at any time to the number of lamps then in use. The field-magnet circuits of the dynamos were connected in multiple with a separate energizing source; and the field-current, and strength of field, were regulated to maintain the required amount of electromotive force upon the supply-mains under all conditions of load from the maximum to the minimum number of lamps in use, and to keep the electromotive force of all machines alike."

Among the earliest of Edison's dynamo experiments were those relating to the core of the armature. He realized at once that the heat generated in a solid core was a prolific source of loss. He experimented with bundles of iron wires variously insulated, also with sheet-iron rolled cylindrically and covered with iron wire wound concentrically. These experiments and many others were tried in a great variety of ways, until, as the result of all this work, Edison arrived at the principle which has remained in the art to this day. He split up the iron core of the armature into thin laminations, separated by paper, thus practically suppressing Foucault currents therein and resulting heating effect. It was in his machine also that mica was used for the first time as an insulating medium in a commutator.[1]

Elementary as these principles will appear to the modern student or engineer, they were denounced as nothing short of absurdity at the time of their promulgation—especially so with regard to Edison's proposal to upset the then settled dictum that the armature resistance should be equal to the external resistance. His proposition was derided in the technical press of the period, both at home and abroad. As public opinion can be best illustrated by actual quotation, we shall present a characteristic instance.

In the *Scientific American* of October 18, 1879, there appeared an illustrated article by Mr. Upton on Edison's dynamo machine, in which Edison's views and claims were set forth. A subsequent issue contained a somewhat acri-

[1] The commercial manufacture of built-up sheets of mica for electrical purposes was first established at the Edison Machine Works, Goerck Street, New York, in 1881.

monious letter of criticism by a well-known maker of dynamo machines. At the risk of being lengthy, we must quote nearly all this letter: "I can scarcely conceive it as possible that the article on the above subject" (Edison's Electric Generator) "in last week's *Scientific American* could have been written from statements derived from Mr. Edison himself, inasmuch as so many of the advantages claimed for the machine described and statements of the results obtained are so manifestly absurd as to indicate on the part of both writer and prompter a positive want of knowledge of the electric circuit and the principles governing the construction and operation of electric machines.

"It is not my intention to criticise the design or construction of the machine (not because they are not open to criticism), as I am now and have been for many years engaged in the manufacture of electric machines, but rather to call attention to the impossibility of obtaining the described results without destroying the doctrine of the conservation and correlation of forces.

. . . . . .

"It is stated that 'the internal resistance of the armature' of this machine 'is only ½ ohm.' On this fact and the disproportion between this resistance and that of the external circuit, the theory of the alleged efficiency of the machine is stated to be based, for we are informed that, 'while this generator in general principle is the same as in the best well-known forms, still there is an all-important difference, which is that it will convert and deliver for useful work nearly double the number of foot-pounds that any other machine will under like conditions.'" The writer of this critical letter then proceeds to quote Mr. Upton's statement of this efficiency: "'Now the energy converted is distributed over the whole resistance, hence if the resistance of the machine be represented by 1 and the exterior circuit by 9, then of the total energy converted nine-tenths will be useful, as it is outside of the machine, and one-tenth is lost in the resistance of the machine.'"

After this the critic goes on to say:

"How any one acquainted with the laws of the electric circuit can make such statements is what I cannot understand. The statement last quoted is mathematically ab-

surd. It implies either that the machine is *capable of increasing its own electromotive force nine times without an increased expenditure of power*, or that external resistance is *not* resistance to the current induced in the Edison machine.

"Does Mr. Edison, or any one for him, mean to say that $\frac{r}{n}$ enables him to obtain nE, and that C is *not* $= \frac{E}{\frac{r}{n}+R}$? If so Mr. Edison has discovered something *more* than perpetual motion, and Mr. Keely had better retire from the field.

"Further on the writer (Mr. Upton) gives us another example of this mode of reasoning when, emboldened and satisfied with the absurd theory above exposed, he endeavors to prove the cause of the inefficiency of the Siemens and other machines. Couldn't the writer of the article see that since $C = \frac{E}{r+R}$, that by $\frac{R}{n}$ or by making $R = r$, the machine would, according to his theory, have returned more useful current to the circuit than could be due to the power employed (and in the ratio indicated), so that there would actually be a creation of force!

. . . . . .

"In conclusion allow me to say that if Mr. Edison thinks he has accomplished so much by the *reduction of the internal resistance* of his machine, that he has much more to do in this direction before his machine will equal *in this respect* others already in the market."

Another participant in the controversy on Edison's generator was a scientific gentleman, who in a long article published in the *Scientific American*, in November, 1879, gravely undertook to instruct Edison in the A B C of electrical principles, and then proceeded to demonstrate mathematically the *impossibility* of doing *what Edison had actually done*. This critic concludes with a gentle rebuke to the inventor for ill-timed jesting, and a suggestion to furnish *authentic* information!

In the light of facts, as they were and are, this article is so full of humor that we shall indulge in a few quotations. It commences in A B C fashion as follows: "Electric machines convert mechanical into electrical energy. . . . The ratio of yield to consumption is the expression of the efficiency of the machine. . . . How many foot-pounds of elec-

tricity can be got out of 100 foot-pounds of mechanical energy? Certainly not more than 100; certainly less. . . . The facts and laws of physics, with the assistance of mathematical logic, never fail to furnish precious (*sic*) answers to such questions."

The would-be critic then goes on to tabulate tests of certain other dynamo machines by a committee of the Franklin Institute in 1879, the results of which showed that these machines returned about 50 per cent. of the applied mechanical energy, ingenuously remarking: "Why is it that when we have produced the electricity, half of it must slip away? Some persons will be content if they are told simply that it is a way which electricity has of behaving. But there is a satisfactory rational explanation which I believe can be made plain to persons of ordinary intelligence. It ought to be known to all those who are making or using machines. I am grieved to observe that many persons who talk and write glibly about electricity do not understand it; some even ignore or deny the fact to be explained."

Here follows *his* explanation, after which he goes on to say: "At this point plausibly comes in a suggestion that the internal part of the circuit be made very small and the external part very large. Why not (say) make the internal part 1, and the external 9, thus saving nine-tenths and losing only one-tenth? Unfortunately, the suggestion is not practical; a fallacy is concealed in it."

He then goes on to prove his case mathematically, to his own satisfaction, following it sadly by condoling with and a warning to Edison: "But about Edison's electric generator! . . . No one capable of making the improvements in the telegraph and telephone, for which we are indebted to Mr. Edison, could be other than an accomplished electrician. His reputation as a scientist, indeed, is smirched by the newspaper exaggerations, and no doubt he will be more careful in future. But there is a danger nearer home, indeed, among his own friends and in his very household.

". . . The writer of page 242" (the original article) "is probably a friend of Mr. Edison, but possibly, alas! a wicked partner. Why does he say such things as these? 'Mr. Edison claims that he realizes 90 per cent. of the power applied to this machine in external work.' . . . Perhaps the writer

is a humorist, and had in his mind Colonel Sellers, etc., which he could not keep out of a serious discussion; but such jests are not good.

"Mr. Edison has built a very interesting machine, and he has the opportunity of making a valuable contribution to the electrical arts by furnishing authentic accounts of its capabilities."

The foregoing extracts are unavoidably lengthy, but, viewed in the light of facts, serve to illustrate most clearly that Edison's conceptions and work were far and away ahead of the comprehension of his contemporaries in the art, and that his achievements in the line of efficient dynamo design and construction were indeed truly fundamental and revolutionary in character. Much more of similar nature to the above could be quoted from other articles published elsewhere, but the foregoing will serve as instances generally representing all. In the controversy which appeared in the columns of the *Scientific American*, Mr. Upton, Edison's mathematician, took up the question on his side, and answered the critics by further elucidations of the principles on which Edison had founded such remarkable and radical improvements in the art. The type of Edison's first dynamo-electric machine, the description of which gave rise to the above controversy, is shown in Fig. 1.

Any account of Edison's work on the dynamo would be incomplete did it omit to relate his conception and construction of the great direct-connected steam-driven generator that was the prototype of the colossal units which are used throughout the world to-day.

In the demonstrating plant installed and operated by him at Menlo Park in 1880 ten dynamos of eight horse-power each were driven by a slow-speed engine through a complicated system of counter-shafting, and, to quote from Mr. Clarke's *Historical Review*, "it was found that a considerable percentage of the power of the engine was necessarily wasted in friction by this method of driving, and to prevent this waste and thus increase the economy of his system, Mr. Edison conceived the idea of substituting a single large dynamo for the several small dynamos, and directly coupling it with the driving engine, and at the same time preserve the requisite high armature speed by using an engine of the high-

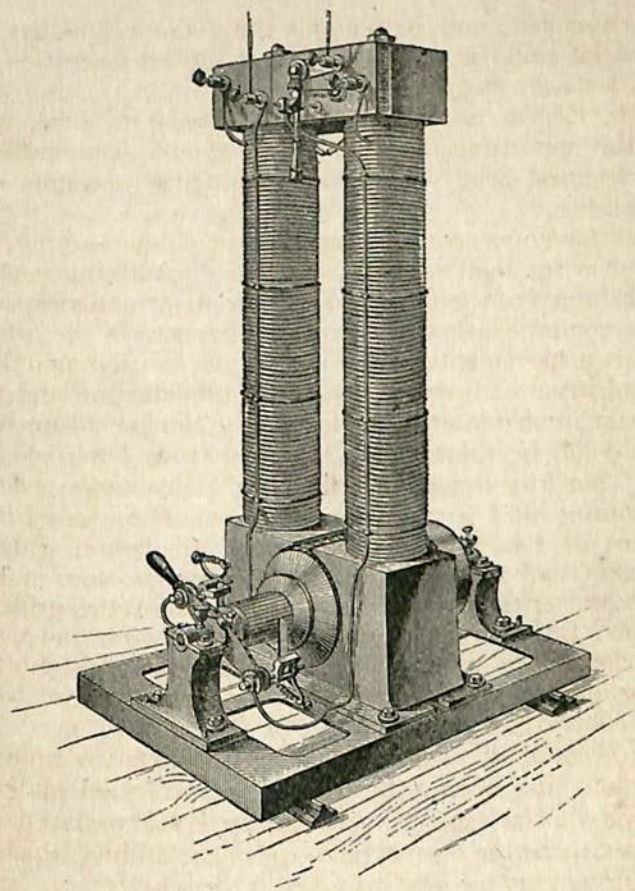

FIG. 1

speed type. He also expected to realize still further gains in economy from the use of a large dynamo in place of several small machines by a more than correspondingly lower armature resistance, less energy for magnetizing the field, and for other minor reasons. To the same end, he intended to supply steam to the engine under a much higher boiler pressure than was customary in stationary-engine driving at that time."

The construction of the first one of these large machines was commenced late in the year 1880. Early in 1881 it was

completed and tested, but some radical defects in armature construction were developed, and it was also demonstrated that a rate of engine speed too high for continuously safe and economical operation had been chosen. The machine was laid aside. An accurate illustration of this machine, as it stood in the engine-room at Menlo Park, is given in Van Nostrand's *Engineering Magazine*, Vol. XXV, opposite page 439, and a brief description is given on page 450.

With the experience thus gained, Edison began, in the spring of 1881, at the Edison Machine Works, Goerck Street, New York City, the construction of the first successful machine of this type. This was the great machine known as "Jumbo No. 1," which is referred to in the narrative as having been exhibited at the Paris International Electrical Exposition, where it was regarded as the wonder of the electrical world. An intimation of some of the tremendous difficulties encountered in the construction of this machine has already been given in preceding pages, hence we shall not now enlarge on the subject, except to note in passing that the terribly destructive effects of the spark of self-induction and the arcing following it were first manifested in this powerful machine, but were finally overcome by Edison after a strenuous application of his powers to the solution of the problem.

It may be of interest, however, to mention some of its dimensions and electrical characteristics, quoting again from Mr. Clarke: "The field-magnet had eight solid cylindrical cores, 8 inches in diameter and 57 inches long, upon each of which was wound an exciting-coil of 3.2 ohms resistance, consisting of 2184 turns of No. 10 B. W. G. insulated copper wire, disposed in six layers. The laminated iron core of the armature, formed of thin iron disks, was 33¾ inches long, and had an internal diameter of 12½ inches, and an external diameter of 26$\frac{7}{16}$ inches. It was mounted on a 6-inch shaft. The field-poles were 33¾ inches long, and 27½ inches inside diameter The armature winding consisted of 146 copper bars on the face of the core, connected into a closed-coil winding by means of 73 copper disks at each end of the core. The cross-sectional area of each bar was 0.2 square inch; their average length was 42.7 inches, and the copper end-disks were 0.065 inch thick. The commutator had 73 sec-

tions. The armature resistance was 0.0092 ohm,[1] of which 0.0055 ohm was in the armature bars and 0.0037 ohm in the end-disks." An illustration of the next latest type of this machine is presented in Fig. 2.

The student may find it interesting to look up Edison's United States Patents Nos. 242,898, 263,133, 263,146, and 246,647, bearing upon the construction of the "Jumbo"; also illustrated articles in the technical journals of the time, among which may be mentioned: *Scientific American*, Vol. XLV, page 367; *Engineering*, London, Vol. XXXII, pages 409 and 419; *The Telegraphic Journal* and *Electrical Review*, London, Vol. IX, pages 431–433, 436–446; *La Nature*, Paris, 9th year, Part II, pages 408–409; *Zeitschrift für Angewandte Elektricitätslehre*, Munich and Leipsic, Vol. IV, pages 4–14; and Dredge's *Electric Illumination*, 1882, Vol. I, page 261.

The further development of these great machines later on, and their extensive practical use, are well known and need no further comment, except in passing it may be noted that subsequent machines had each a capacity of 1200 lamps of 16 candle-power, and that the armature resistance was still further reduced to 0.0039 ohm.

Edison's clear insight into the future, as illustrated by his persistent advocacy of large direct-connected generating units, is abundantly vindicated by present-day practice. His Jumbo machines, of 175 horse-power, so enormous for their time, have served as prototypes, and have been succeeded by generators which have constantly grown in size and capacity until at this time (1910) it is not uncommon to employ such generating units of a capacity of 14,000 kilowatts, or about 18,666 horse-power.

We have not entered into specific descriptions of the many other forms of dynamo machines invented by Edison, such as the multipolar, the disk dynamo, and the armature with two windings, for sub-station distribution; indeed, it is not possible within our limited space to present even a brief digest of Edison's great and comprehensive work on the dynamo-electric machine, as embodied in his extensive ex-

[1] Had Edison in Upton's *Scientific American* article in 1879 proposed such an exceedingly low armature resistance for this immense generator (although its ratio was proportionate to the original machine), his critics might probably have been sufficiently indignant as to be unable to express themselves coherently.

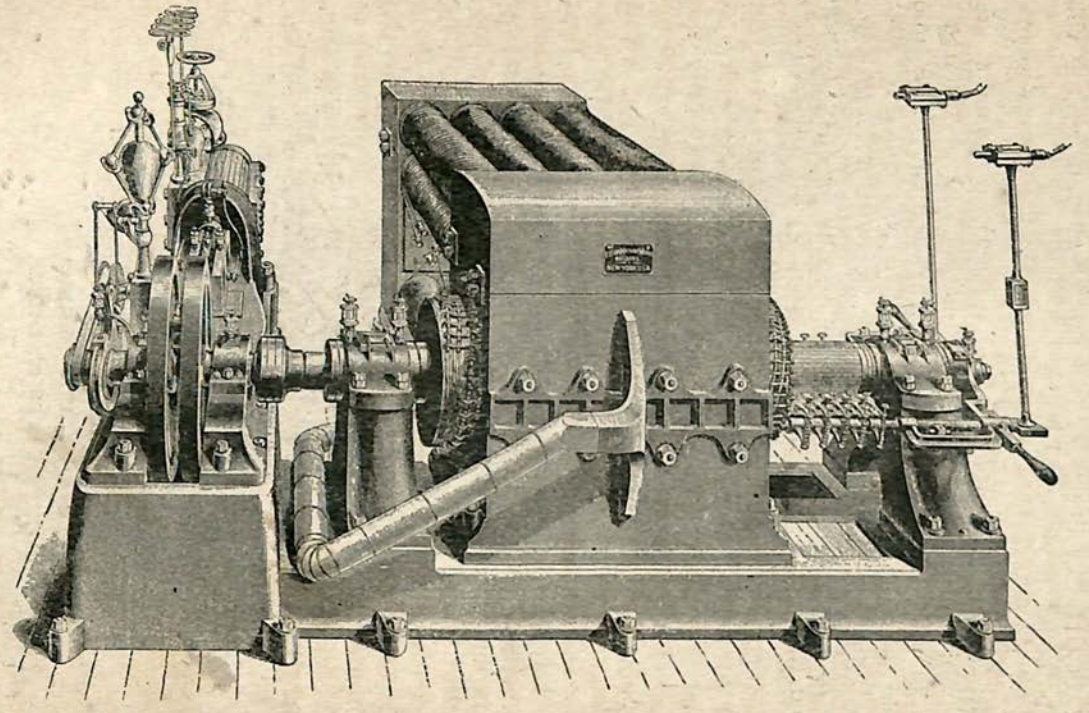

FIG. 2

periments and in over one hundred patents granted to him. We have, therefore, confined ourselves to the indication of a few salient and basic features, leaving it to the interested student to examine the patents and the technical literature of the long period of time over which Edison's labors were extended.

Although he has not given any attention to the subject of generators for many years, an interesting instance of his incisive method of overcoming minor difficulties occurred while the present volumes were under preparation (1909). Carbon for commutator brushes has been superseded by graphite in some cases, the latter material being found much more advantageous, electrically. Trouble developed, however, for the reason that while carbon was hard and would wear away the mica insulation simultaneously with the copper, graphite, being softer, would wear away only the copper, leaving ridges of mica and thus causing sparking through unequal contact. At this point Edison was asked to diagnose the trouble and provide a remedy. He suggested the cutting out of the mica pieces almost to the bottom, leaving the commutator bars separated by air-spaces. This scheme was objected to on the ground that particles of graphite would fill these air-spaces and cause a short-circuit. His answer was that the air-spaces constituted the value of his plan, as the particles of graphite falling into them would be thrown out by the action of centrifugal force as the commutator revolved. And thus it occurred as a matter of fact, and the trouble was remedied. This idea was subsequently adopted by a great manufacturer of generators.

XI

THE EDISON FEEDER SYSTEM

TO quote from the preamble of the specifications of United States Patent No. 264,642, issued to Thomas A. Edison, September 19, 1882: "This invention relates to a method of equalizing the tension or 'pressure' of the current through an entire system of electric lighting or other translation of electric force, preventing what is ordinarily known as a 'drop' in those portions of the system the more remote from the central station. . . ."

The problem which was solved by the Edison feeder system was that relating to the equal distribution of current on a large scale over extended areas, in order that a constant and uniform electrical pressure could be maintained in every part of the distribution area without prohibitory expenditure for copper for mains and conductors.

This problem had a twofold aspect, although each side was inseparably bound up in the other. On the one hand, it was obviously necessary in a lighting system that each lamp should be of standard candle-power, and capable of interchangeable use on any part of the system, giving the same degree of illumination at every point, whether near to or remote from the source of electrical energy. On the other hand, this must be accomplished by means of a system of conductors so devised and arranged that while they would insure the equal pressure thus demanded, their mass and consequent cost would not exceed the bounds of practical and commercially economical investment.

The great importance of this invention can be better understood and appreciated by a brief glance at the state of the art in 1878-79, when Edison was conducting the final series of investigations which culminated in his invention of the incandescent lamp and *system* of lighting. At this time, and

for some years previously, the scientific world had been working on the "subdivision of the electric light," as it was then termed. Some leading authorities pronounced it absolutely impossible of achievement on any extended scale, while a very few others, of more optimistic mind, could see no gleam of light through the darkness, but confidently hoped for future developments by such workers as Edison.

The earlier investigators, including those up to the period above named, thought of the problem as involving the subdivision of a *fixed unit* of current, which, being sufficient to cause illumination by one large lamp, might be divided into a number of small units whose aggregate light would equal the candle-power of this large lamp. It was found, however, in their experiments that the contrary effect was produced, for with every additional lamp introduced in the circuit the total candle-power decreased instead of increasing. If they were placed in series the light varied inversely as the *square* of the number of lamps in circuit; while if they were inserted in multiple arc, the light diminished as the *cube* of the number in circuit.[1] The idea of maintaining a constant potential and of *proportioning the current* to the number of lamps in circuit did not occur to most of these early investigators as a feasible method of overcoming the supposed difficulty.

It would also seem that although the general method of placing experimental lamps in multiple arc was known at this period, the idea of "drop" of electrical pressure was imperfectly understood, if, indeed, realized at all, as a most important item to be considered in attempting the solution of the problem. As a matter of fact, the investigators preceding Edison do not seem to have conceived the idea of a "system" at all; hence it is not surprising to find them far astray from the correct theory of subdivision of the electric current. It may easily be believed that the term "subdivision" was a misleading one to these early experimenters. For a very short time Edison also was thus misled, but as

[1] M. Fontaine, in his book on *Electric Lighting* (1877), showed that with the current of a battery composed of sixteen elements, one lamp gave an illumination equal to 54 burners; whereas two similar lamps, if introduced in parallel or multiple arc, gave the light of only 6½ burners in all; three lamps of only 2 burners in all; four lamps of only ¾ of one burner, and five lamps of ¼ of a burner.

soon as he perceived that the problem was one involving the *multiplication of current units*, his broad conception of a "system" was born.

Generally speaking, all conductors of electricity offer more or less resistance to the passage of current through them, and in the technical terminology of electrical science the word "drop" (when used in reference to a system of distribution) is used to indicate a fall or loss of initial electrical pressure arising from the resistance offered by the copper conductors leading from the source of energy to the lamps. The result of this resistance is to convert or translate a portion of the electrical energy into another form—namely, heat, which in the conductors is *useless* and wasteful and to some extent inevitable in practice, but is to be avoided and remedied as far as possible.

It is true that in an electric-lighting system there is also a fall or loss of electrical pressure which occurs in overcoming the much greater resistance of the filament in an incandescent lamp. In this case there is also a translation of the energy, but here it accomplishes a *useful* purpose; as the energy is converted into the form of light through the incandescence of the filament. Such a conversion is called "work" as distinguished from "drop," although a fall of initial electrical pressure is involved in each case.

The percentage of "drop" varies according to the quantity of copper used in conductors, both as to cross-section and length. The smaller the cross-sectional area, the greater the percentage of drop. The practical effect of this drop would be a loss of illumination in the lamps as we go farther away from the source of energy. This may be illustrated by a simple diagram in which *G* is a generator, or source of energy, furnishing current at a potential or electrical pressure of 110 volts; 1 and 2 are main conductors, from which 110-volt lamps, *L*, are taken in derived circuits. It will be understood that the circuits represented in Fig. 1 are theoretically supposed to extend over a large area. The main conductors are sufficiently large in cross-section to offer but little resistance in those parts which are comparatively near the generator, but as the current traverses their extended length there is a gradual increase of resistance to overcome, and consequently the drop increases, as shown by the figures.

The result of the drop in such a case would be that while the two lamps, or groups, nearest the generator would be burning at their proper degree of illumination, those beyond would give lower and lower candle-power, successively, until the last lamp, or group, would be giving only about two-thirds the light of the first two. In other words, a very slight drop in voltage means a disproportionately great loss in illumination. Hence, by using a primitive system of distribution, such as that shown by Fig. 1, the initial voltage would have to be so high, in order to obtain the proper candle-power at the end of the circuit, that the lamps nearest the generator would be dangerously overheated. It might be suggested as a solution of this problem that lamps of different voltages could be used. But, as we are considering systems of extended distribution employing vast numbers of lamps (as in New York City, where millions are in use), it will be seen that

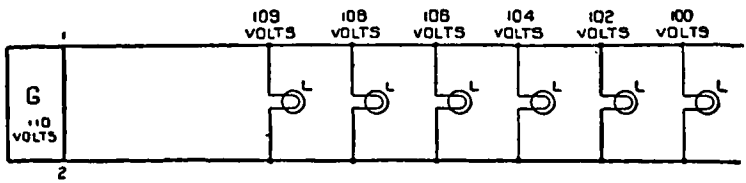

FIG. 1

such a method would lead to inextricable confusion, and therefore be absolutely out of the question. Inasmuch as the percentage of drop decreases in proportion to the increased cross-section of the conductors, the only feasible plan would seem to be to increase their size to such dimensions as to eliminate the drop altogether, beginning with conductors of large cross-section and tapering off as necessary. This would, indeed, obviate the trouble, but, on the other hand, would give rise to a much more serious difficulty—namely, the enormous outlay for copper; an outlay so great as to be absolutely prohibitory in considering the electric lighting of large districts, as now practised.

Another diagram will probably make this more clear. The reference figures are used as before, except that the horizontal lines extending from square marked *G* represent the main conductors. As each lamp requires and takes its

own proportion of the total current generated, it is obvious that the size of the conductors to carry the current for a number of lamps must be as large as the sum of *all* the separate conductors which would be required to carry the

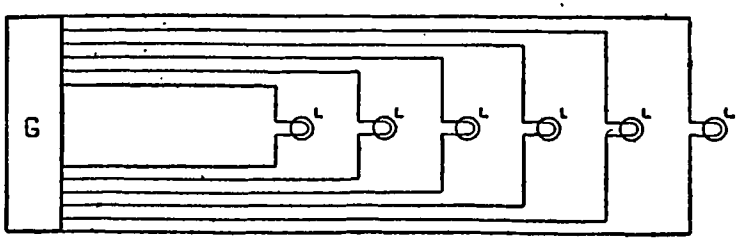

FIG. 2

necessary amount of current to each lamp separately. Hence, in a primitive multiple-arc system, it was found that the system must have conductors of a size equal to the aggregate of the individual conductors necessary for every lamp. Such conductors might either be separate, as shown above (Fig. 2), or be bunched together, or made into a solid tapering conductor, as shown in the following figure:

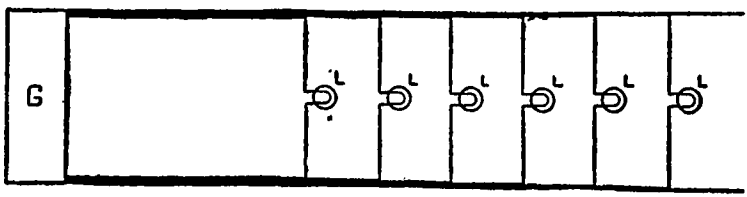

FIG. 3

The enormous mass of copper needed in such a system can be better appreciated by a concrete example. Some years ago Mr. W. J. Jenks made a comparative calculation which showed that such a system of conductors (known as the "Tree" system), to supply 8640 lamps in a territory extending over so small an area as nine city blocks, would require 803,250 pounds of copper, which at the then price of 25 cents per pound would cost $200,812.50!

Such, in brief, was the state of the art, generally speaking, at the period above named (1878–79). As early in the art as the latter end of the year 1878, Edison had developed his

ideas sufficiently to determine that the problem of electric illumination by small units could be solved by using incandescent lamps of high resistance and small radiating surface, and by distributing currents of constant potential thereto in multiple arc by means of a ramification of conductors, starting from a central source and branching therefrom in every direction. This was an equivalent of the method illustrated in Fig. 3, known as the "Tree" system, and was, in fact, the system used by Edison in the first and famous exhibition of his electric light at Menlo Park around the Christmas period of 1879. He realized, however, that the enormous investment for copper would militate against the commercial adoption of electric lighting on an extended scale. His next inventive step covered the division of a large city district into a number of small sub-stations supplying current through an interconnected network of conductors, thus reducing expenditure for copper to some extent, because each distribution unit was small and limited the drop.

His next development was the radical advancement of the state of the art to the feeder system, covered by the patent now under discussion. This invention swept away the tree and other systems, and at one bound brought into being the possibility of effectively distributing large currents over extended areas with a commercially reasonable investment for copper.

The fundamental principles of this invention were, first, to sever entirely any direct connection of the main conductors with the source of energy; and, second, to feed current at a constant potential to central points in such main conductors by means of other conductors, called "feeders," which were to be connected directly with the source of energy at the central station. This idea will be made more clear by reference to the following simple diagram, in which the same letters are used as before, with additions:

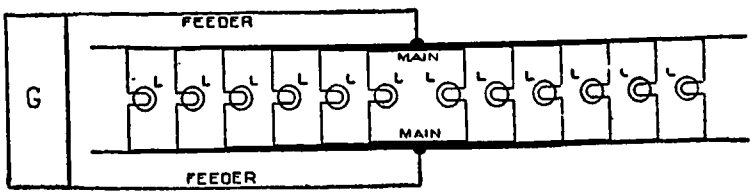

FIG. 4

In further elucidation of the diagram, it may be considered that the mains are laid in the street along a city block, more or less distant from the station, while the feeders are connected at one end with the source of energy at the station, their other extremities being connected to the mains at central points of distribution. Of course, this system was intended to be applied in every part of a district to be supplied with current, separate sets of feeders running out from the station to the various centres. The distribution mains were to be of sufficiently large size that between their most extreme points the loss would not be more than 3 volts. Such a slight difference would not make an appreciable variation in the candle-power of the lamps.

By the application of these principles, the inevitable but useless loss, or "drop," required by economy might be incurred, but was *localized in the feeders*, where it would not affect the uniformity of illumination of the lamps in any of the circuits, whether near to or remote from the station, because any variations of loss in the feeders would not give rise to similar fluctuations in any lamp circuit. The feeders might be operated at any desired percentage of loss that would realize economy in copper, so long as they delivered current to the main conductors at the potential represented by the average voltage of the lamps.

Thus the feeders could be made comparatively small in cross-section. It will be at once appreciated that, inasmuch as the mains required to be laid *only* along the blocks to be lighted, and were not required to be run all the way to the central station (which might be half a mile or more away), the saving of copper by Edison's feeder system was enormous. Indeed, the comparative calculation of Mr. Jenks, above referred to, shows that to operate the same number of lights in the same extended area of territory, the feeder system would require only 128,739 pounds of copper, which, at the then price of 25 cents per pound, would cost only $32,185, or *a saving* of $168,627.50 for copper in this very small district of only nine blocks.

An additional illustration, appealing to the eye, is presented in the following sketch, in which the comparative masses of copper of the tree and feeder systems for carrying the same current are shown side by side:

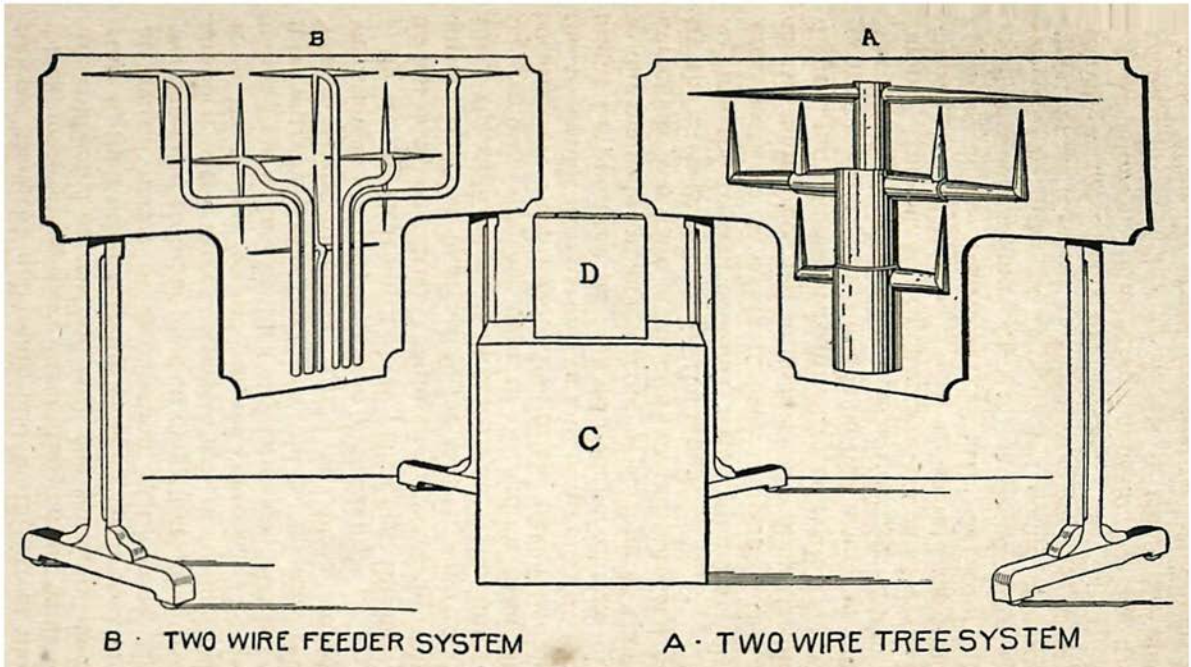

FIG. 5

Cube *C* represents one one-hundredth of mass of copper conductors required for nine city blocks, containing 8640 lamps of 16 c. p., by two-wire tree system.

Cube *D* represents one one-hundredth of mass of copper conductors required for nine city blocks, containing 8640 lamps of 16 c. p., by two-wire feeder system.

XII

THE THREE-WIRE SYSTEM

THIS invention is covered by United States Patent No. 274,290, issued to Edison on March 20, 1883. The object of the invention was to provide for increased economy in the quantity of copper employed for the main conductors in electric light and power installations of considerable extent, at the same time preserving separate and independent control of each lamp, motor, or other translating device, upon any one of the various distribution circuits.

Immediately prior to this invention the highest state of the art of electrical distribution was represented by Edison's feeder system, which has already been described as a straight parallel or multiple-arc system wherein economy of copper was obtained by using separate sets of conductors—minus load—feeding current at standard potential or electrical pressure into the mains at centres of distribution.

It should be borne in mind that the incandescent lamp which was accepted at the time as a standard (and has so remained to the present day) was a lamp of 110 volts or thereabouts. In using the word "standard," therefore, it is intended that the same shall apply to lamps of about that voltage, as well as to electrical circuits of the approximate potential to operate them.

Briefly stated, the principle involved in the three-wire system is to provide main circuits of double the standard potential, so as to operate standard lamps, or other translating devices, in multiple series of two to each series; and for the purpose of securing independent, individual control of each unit, to divide each main circuit into any desired number of derived circuits of standard potential (properly balanced) by means of a central compensating conductor which would be normally neutral, but designed to carry any

minor excess of current that might flow by reason of any temporary unbalancing of either side of the main circuit.

Reference to the following diagrams will elucidate this principle more clearly than words alone can do. For the purpose of increased lucidity we will first show a plain multiple-series system.

In this diagram G^1 and G^2 represent two generators, each producing current at a potential of 110 volts. By connect-

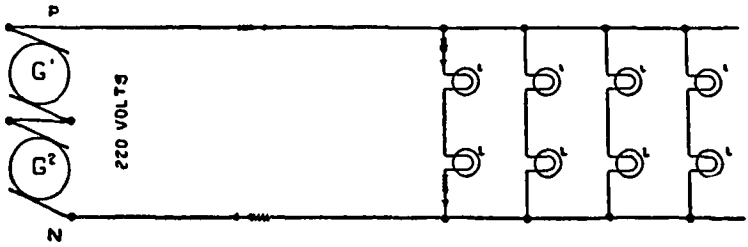

FIG. 1

ing them in series this potential is doubled, thus providing a main circuit (P and N) of 220 volts. The figures marked L represent eight lamps of 110 volts each, in multiple series of two, in four derived circuits. The arrows indicate the flow of current. By this method each pair of lamps takes, together, only the same quantity or volume of current required by a single lamp in a simple multiple-arc system; and, as the cross-section of a conductor depends upon the quantity of current carried, such an arrangement as the above would allow the use of conductors of only one-fourth the cross-section that would be otherwise required. From the standpoint of economy of investment such an arrangement would be highly desirable, but considered commercially it is impracticable because the principle of independent control of each unit would be lost, as the turning out of a lamp in any series would mean the extinguishment of its companion also. By referring to the diagram it will be seen that each series of two forms one continuous path between the main conductors, and if this path be broken at any one point current will immediately cease to flow in that particular series.

Edison, by his invention of the three-wire system, over-

came this difficulty entirely, and at the same time conserved, approximately, the saving of copper, as will be apparent from the following illustration of that system, in its simplest form.

The reference figures are similar to those in the preceding diagram, and all conditions are also alike except that a central compensating, or balancing, conductor, *P N*, is here introduced. This is technically termed the "neutral" wire, and in the discharge of its functions lies the solution of the problem of economical distribution. Theoretically, a three-wire installation is evenly balanced by wiring for an equal number of lamps on both sides. If all these lamps were always lighted, burned, and extinguished simultaneously the central conductor would, in fact, remain neutral, as there would be no current passing through it, except from lamp to lamp. In practice, however, no such perfect conditions can obtain, hence the necessity of the provision for balancing in order to maintain the principle of independent control of each unit.

It will be apparent that the arrangement shown in Fig. 2 comprises practically two circuits combined in one system,

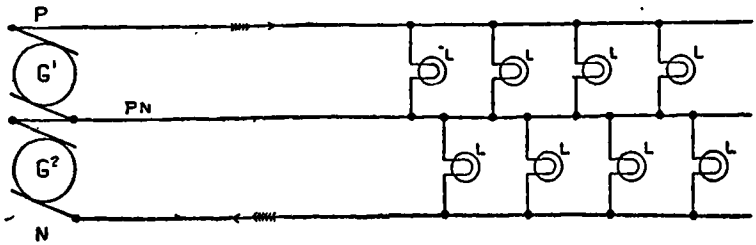

FIG. 2

in which the central conductor, *P N*, in case of emergency, serves in two capacities—namely, as negative to generator G^1 or as positive to generator G^2, although normally neutral. There are two sides to the system, the positive side being represented by the conductors *P* and *P N*, and the negative side by the conductors *P N* and *N*. Each side, if considered separately, has a potential of about 110 volts, yet the potential of the two outside conductors, *P* and *N*, is 220 volts. The lamps are 110 volts.

In practical use the operation of the system is as follows: If all the lamps were lighted the current would flow along *P* and through each pair of lamps to *N*, and so back to the source of energy. In this case the balance is preserved and the central wire remains neutral, as no return current flows through it to the source of energy. But let us suppose that one lamp on the positive side is extinguished. None of the other lamps is affected thereby, but the system is immediately thrown out of balance, and on the positive side there is an excess of current to this extent which flows along or through the central conductor and returns to the generator, the central conductor thus becoming the negative of that side of the system for the time being. If the lamp extinguished had been one of those on the negative side of the system results of a similar nature would obtain, except that the central conductor would for the time being become the positive of that side, and the excess of current would flow through the negative, *N*, back to the source of energy. Thus it will be seen that a three-wire system, considered as a whole, is elastic in that it may operate as one when in balance and as two when unbalanced, but in either event giving independent control of each unit.

For simplicity of illustration a limited number of circuits, shown in Fig. 2, has been employed. In practice, however, where great numbers of lamps are in use (as, for instance, in New York City, where about 7,000,000 lamps are operated from various central stations), there is constantly occurring more or less change in the balance of many circuits extending over considerable distances, but of course there is a net result which is always on one side of the system or the other for the time being, and this is met by proper adjustment at the appropriate generator in the station.

In order to make the explanation complete, there is presented another diagram showing a three-wire system unbalanced:

The reference figures are used as before, but in this case the vertical lines represent branches taken from the main conductors into buildings or other spaces to be lighted, and the loops between these branch wires represent lamps in operation. It will be seen from this sketch that there are ten lamps on the positive side and twelve on the negative.

side. Hence, the net result is an excess of current equal to that required by two lamps flowing through the central or compensating conductor, which is now acting as positive to generator *G*.[2] The arrows show the assumed direction of flow of current throughout the system, and the small figures

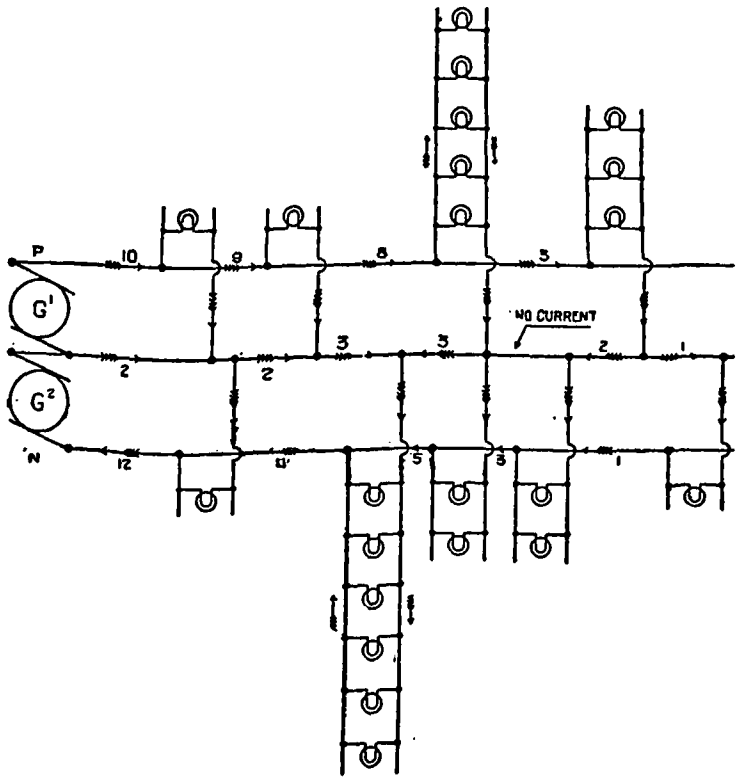

FIG. 3

at the arrow-heads the volume of that current expressed in the number of lamps which it supplies.

The commercial value of this invention may be appreciated from the fact that by the application of its principles there is effected a saving of 62½ per cent. of the amount of copper over that which would be required for conductors in any previously devised two-wire system carrying the same load. This arises from the fact that by the doubling of

potential the two outside mains are reduced to one-quarter the cross-section otherwise necessary. A saving of 75 per cent. would thus be assured, but the addition of a third, or compensating, conductor of the same cross-section as one of the outside mains reduces the total saving to 62½ per cent.

The three-wire system is in universal use throughout the world at the present day.

XIII

EDISON'S ELECTRIC RAILWAY

AS narrated in Chapter XVIII, there were two electric railroads installed by Edison at Menlo Park—one in 1880, originally a third of a mile long, but subsequently increased to about a mile in length, and the other in 1882, about three miles long. As the 1880 road was built very soon after Edison's notable improvements in dynamo machines, and as the art of operating them to the best advantage was then being developed, this early road was somewhat crude as compared with the railroad of 1882; but both were practicable and serviceable for the purpose of hauling passengers and freight. The scope of the present article will be confined to a description of the technical details of these two installations.

The illustration opposite page 454 of the preceding narrative shows the first Edison locomotive and train of 1880 at Menlo Park.

For the locomotive a four-wheel iron truck was used, and upon it was mounted one of the long "Z" type 110-volt Edison dynamos, with a capacity of 75 amperes, which was to be used as a motor. This machine was laid on its side, its armature being horizontal and located toward the front of the locomotive.

We now quote from an article by Mr. E. W. Hammer, published in the *Electrical World*, New York, June 10, 1899, and afterward elaborated and reprinted in a volume entitled *Edisonia*, compiled and published under the auspices of a committee of the Association of Edison Illuminating Companies, in 1904: "The gearing originally employed consisted of a friction-pulley upon the armature shaft, another friction-pulley upon the driven axle, and a third friction-pulley which could be brought in contact with the other two by a suitable lever. Each wheel of the locomotive was made with a

metallic rim and a centre portion made of wood or papier-mâché. A three-legged spider connected the metal rim of each front wheel to a brass hub, upon which rested a collecting brush. The other wheels were subsequently so equipped. It was the intention, therefore, that the current should enter the locomotive wheels at one side, and after passing through the metal spiders, collecting brushes and motor, would pass out through the corresponding brushes, spiders, and wheels to the other rail."

As to the road: "The rails were light and were spiked to ordinary sleepers, with a gauge of about three and one-half feet. The sleepers were laid upon the natural grade, and there was comparatively no effort made to ballast the road. . . . No special precautions were taken to insulate the rails from the earth or from each other."

The road started about fifty feet away from the generating station, which in this case was the machine shop. Two of the "Z" type dynamos were used for generating the current, which was conveyed to the two rails of the road by underground conductors.

On Thursday, May 13, 1880, at 4 o'clock in the afternoon, this historic locomotive made its first trip, packed with as many of the "boys" as could possibly find a place to hang on. "Everything worked to a charm, until, in starting up at one end of the road, the friction gearing was brought into action too suddenly and it was wrecked. This accident demonstrated that some other method of connecting the armature with the driven axle should be arranged.

"As thus originally operated, the motor had its field circuit in permanent connection as a shunt across the rails, and this field circuit was protected by a safety-catch made by turning up two bare ends of the wire in its circuit and winding a piece of fine copper wire across from one bare end to the other. The armature circuit had a switch in it which permitted the locomotive to be reversed by reversing the direction of current flow through the armature.

"After some consideration of the gearing question, it was decided to employ belts instead of the friction-pulleys." Accordingly, Edison installed on the locomotive a system of belting, including an idler-pulley which was used by means of a lever to tighten the main driving-belt, and thus power

was applied to the driven axle. This involved some slipping and consequent burning of belts; also, if the belt were prematurely tightened, the burning-out of the armature. This latter event happened a number of times, "and proved to be such a serious annoyance that resistance-boxes were brought out from the laboratory and placed upon the locomotive in series with the armature. This solved the difficulty. The locomotive would be started with these resistance-boxes in circuit, and after reaching full speed the operator could plug the various boxes out of circuit, and in that way increase the speed." To stop, the armature circuit was opened by the main switch and the brake applied.

This arrangement was generally satisfactory, but the resistance-boxes scattered about the platform and foot-rests being in the way, Edison directed that some No. 8 B. & S. copper wire be wound on the lower leg of the motor field-magnet. "By doing this the resistance was put where it would take up the least room, and where it would serve as an additional field-coil when starting the motor, and it replaced all the resistance-boxes which had heretofore been in plain sight. The boxes under the seat were still retained in service. The coil of coarse wire was in series with the armature, just as the resistance-boxes had been, and could be plugged in or out of circuit at the will of the locomotive driver. The general arrangement thus secured was operated as long as this road was in commission."

On this short stretch of road there were many sharp curves and steep grades, and in consequence of the high speed attained (as high as forty-two miles an hour) several derailments took place, but fortunately without serious results. Three cars were in service during the entire time of operating this 1880 railroad: one a flat-car for freight; one an open car with two benches placed back to back; and the third a box-car, familiarly known as the "Pullman." This latter car had an interesting adjunct in an electric braking system (covered by Edison's Patent No. 248,430). "Each car axle had a large iron disk mounted on and revolving with it between the poles of a powerful horseshoe electromagnet. The pole-pieces of the magnet were movable, and would be attracted to the revolving disk when the magnet was energized, grasping the same and acting to retard the revolution of the car axle."

APPENDIX

Interesting articles on Edison's first electric railroad were published in the technical and other papers, among which may be mentioned the New York *Herald*, May 15 and July 23, 1880; the New York *Graphic*, July 27, 1880; and the *Scientific American*, June 6, 1880.

Edison's second electric railroad of 1882 was more pretentious as regards length, construction, and equipment. It was about three miles long, of nearly standard gauge, and substantially constructed. Curves were modified, and grades eliminated where possible by the erection of numerous trestles. This road also had some features of conventional railroads, such as sidings, turn-tables, freight platform, and car-house. "Current was supplied to the road by underground feeder cables from the dynamo-room of the laboratory. The rails were insulated from the ties by giving them two coats of japan, baking them in the oven, and then placing them on pads of tar-impregnated muslin laid on the ties. The ends of the rails were not japanned, but were electroplated, to give good contact surfaces for fish-plates and copper bonds."

The following notes of Mr. Frederick A. Scheffler, who designed the passenger locomotive for the 1882 road, throw an interesting light on its technical details:

"In May, 1881, I was engaged by Mr. M. F. Moore, who was the first General Manager of the Edison Company for Isolated Lighting, as a draftsman to undertake the work of designing and building Edison's electric locomotive No. 2.

"Previous to that time I had been employed in the engineering department of Grant Locomotive Works, Paterson, New Jersey, and the Rhode Island Locomotive Works, Providence, Rhode Island. . . .

"It was Mr. Edison's idea, as I understood it at that time, to build a locomotive along the general lines of steam locomotives (at least, in outward appearance), and to combine in that respect the framework, truck, and other parts known to be satisfactory in steam locomotives at the same time.

"This naturally required the services of a draftsman accustomed to steam-locomotive practice. . . . Mr. Moore was a man of great railroad and locomotive experience, and his

knowledge in that direction was of great assistance in the designing and building of this locomotive.

"At that time I had no knowledge of electricity. . . . One could count so-called electrical engineers on his fingers then, and have some fingers left over.

"Consequently, the *electrical* equipment was designed by Mr. Edison and his assistants. The data and parts, such as motor, rheostat, switches, etc., were given to me, and my work was to design the supporting frame, axles, counter-shafts, driving mechanism, speed control, wheels and boxes, cab, running board, pilot (or 'cow-catcher'), buffers, and even supports for the headlight. I believe I also designed a bell and supports. From this it will be seen that the locomotive had all the essential paraphernalia to make it *look* like a steam locomotive.

"The principal part of the outfit was the electric motor. At that time motors were curiosities. There were no electric motors even for stationary purposes, except freaks built for experimental uses. This motor was made from the parts—such as fields, armature, commutator, shaft and bearings, etc., of an Edison "Z," or 60-light dynamo. It was the only size of dynamo that the Edison Company had marketed at that time. . . . As a motor, it was wound to run at maximum speed to develop a torque equal to about fifteen horse-power with 220 volts. At the generating station at Menlo Park four Z dynamos of 110 volts were used, connected two in series, in multiple arc, giving a line voltage of 220.

"The motor was located in the front part of the locomotive, on its side, with the armature shaft across the frames, or parallel with the driving axles.

"On account of the high speed of the armature shaft it was not possible to connect with driving-axles direct, but this was an advantage in one way, as by introducing an intermediate counter-shaft (corresponding to the well-known type of double-reduction motor used on trolley-cars since 1885), a fairly good arrangement was obtained to regulate the speed of the locomotive, exclusive of resistance in the electric circuit.

"Endless leather belting was used to transmit the power from the motor to the counter-shaft, and from the latter to the driving-wheels, which were the front pair. A vertical

idler-pulley was mounted in a frame over the belt from motor to counter-shaft, terminating in a vertical screw and hand-wheel for tightening the belt to increase speed, or the reverse to lower speed. This hand-wheel was located in the cab, where it was easily accessible. . . .

"The rough outline sketched below shows the location of motor in relation to counter-shaft, belting, driving-wheels, idler, etc.:

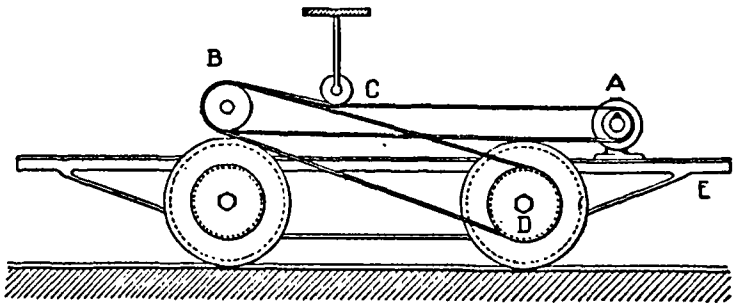

FIG. 1

A—Motor; *B*—Counter-shaft; *C*—Idler; *D*—Driving-wheels; *E*—Frames.

"On account of both rails being used for circuits, . . . the driving-wheels had to be split circumferentially and completely insulated from the axles. This was accomplished by means of heavy wood blocks well shellacked or otherwise treated to make them water and weather proof, placed radially on the inside of the wheels, and then substantially bolted to the hubs and rims of the latter.

"The weight of the locomotive was distributed over the driving-wheels in the usual locomotive practice by means of springs and equalizers.

"The current was taken from the rims of the driving-wheels by a three-pronged collector of brass, against which flexible copper brushes were pressed—a simple manner of overcoming any inequalities of the road-bed.

"The late Mr. Charles T. Hughes was in charge of the track construction at Menlo Park. . . . His work was excellent throughout, and the results were highly satisfactory so far as they could possibly be with the arrangement originally planned by Mr. Edison and his assistants.

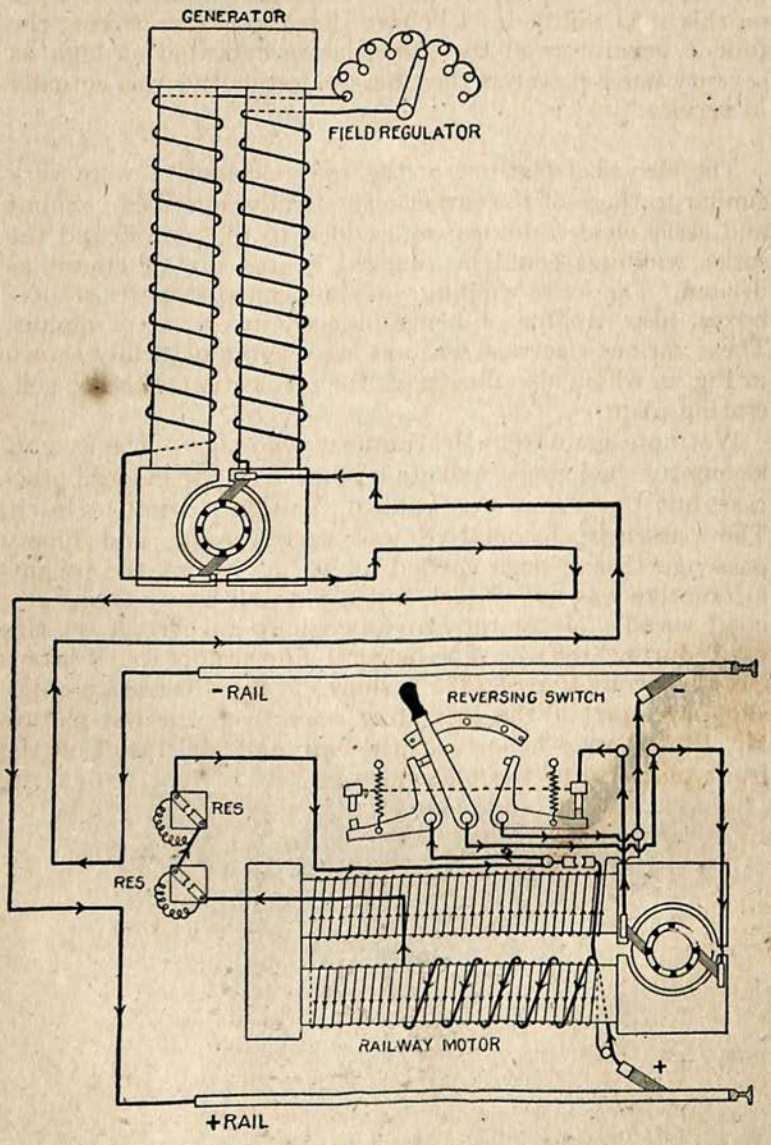
GENERATOR
FIELD REGULATOR
-RAIL
REVERSING SWITCH
-
RES
RES
RAILWAY MOTOR
+
+RAIL

FIG. 2

APPENDIX

"Mr. Charles L. Clarke, one of the earliest electrical engineers employed by Mr. Edison, made a number of tests on this 1882 railroad. I believe that the engine driving the four Z generators at the power-house indicated as high as seventy horse-power at the time the locomotive was actually in service."

The electrical features of the 1882 locomotive were very similar to those of the earlier one, already described. Shunt and series field-windings were added to the motor, and the series windings could be plugged in and out of circuit as desired. The series winding was supplemented by resistance-boxes, also capable of being plugged in or out of circuit. These various electrical features are diagrammatically shown in Fig. 2, which also illustrates the connection with the generating plant.

We quote again from Mr. Hammer, who says: "The freight-locomotive had single reduction gears, as is the modern practice, but the power was applied through a friction-clutch. The passenger-locomotive was very speedy, and ninety passengers have been carried at a time by it; the freight-locomotive was not so fast, but could pull heavy trains at a good speed. Many thousand people were carried on this road during 1882." The general appearance of Edison's electric locomotive of 1882 is shown in the illustration opposite page 462 of the preceding narrative. In the picture Mr. Edison may be seen in the cab, and Mr. Insull on the front platform of the passenger-car.

XIV

TRAIN TELEGRAPHY

WHILE the one-time art of telegraphing to and from moving trains was essentially a wireless system, and allied in some of its principles to the art of modern wireless telegraphy through space, the two systems cannot, strictly speaking, be regarded as identical, as the practice of the former was based entirely on the phenomenon of induction.

Briefly described in outline, the train telegraph system consisted of an induction circuit obtained by laying strips of metal along the top or roof of a railway-car, and the installation of a special telegraph line running parallel with the track and strung on poles of only medium height. The train, and also each signalling station, was equipped with regulation telegraph apparatus, such as battery, key, relay, and sounder, together with induction-coil and condenser. In addition, there was a special transmitting device in the shape of a musical reed, or "buzzer." In practice, this buzzer was continuously operated at a speed of about five hundred vibrations per second by an auxiliary battery. Its vibrations were broken by means of a telegraph key into long and short periods, representing Morse characters, which were transmitted inductively from the train circuit to the pole line, or *vice versa*, and received by the operator at the other end through a high-resistance telephone receiver inserted in the secondary circuit of the induction-coil.

The accompanying diagrammatic sketch of a simple form of the system, as installed on a car, will probably serve to make this more clear.

An insulated wire runs from the metallic layers on the roof of the car to switch *S*, which is shown open in the sketch. When a message is to be received on the car from a station more or less remote, the switch is thrown to the left to con-

nect with a wire running to the telephone receiver, *T*. The other wire from this receiver is run down to one of the axles and there permanently connected, thus making a ground. The operator puts the receiver to his ear and listens for the message, which the telephone renders audible in the Morse characters.

If a message is to be transmitted from the car to a receiving station, near or distant, the switch, *S*, is thrown to the other side, thus connecting with a wire leading to one end of the secondary of induction-coil *C*. The other end of the

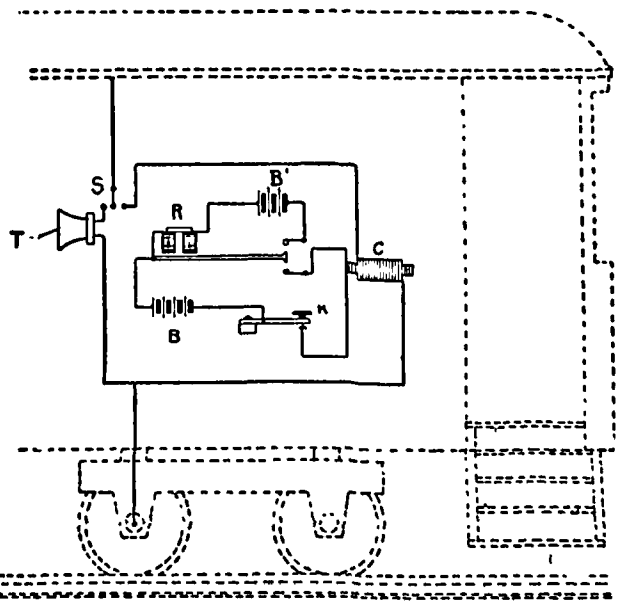

FIG. 1

secondary is connected with the grounding wire. The primary of the induction-coil is connected as shown, one end going to key *K*, and the other to the buzzer circuit. The other side of the key is connected to the transmitting battery, while the opposite pole of this battery is connected in the buzzer circuit. The buzzer, *R*, is maintained in rapid vibration by its independent auxiliary battery, B^1.

When the key is pressed down the circuit is closed, and current from the transmitting battery, *B*, passes through

primary of the coil, *C*, and induces a current of greatly increased potential in the secondary. The current, as it passes into the primary, being broken up into short impulses by the tremendously rapid vibrations of the buzzer, induces similarly rapid waves of high potential in the secondary, and these in turn pass to the roof and thence through the intervening air by induction to the telegraph wire. By a continued lifting and depression of the key in the regular manner, these waves are broken up into long and short periods, and are thus transmitted to the station, *via* the wire, in Morse characters, dots and dashes.

The receiving stations along the line of the railway were similarly equipped as to apparatus, and, generally speaking, the operations of sending and receiving messages were substantially the same as above described.

The equipment of an operator on a car was quite simple, consisting merely of a small lap-board, on which were mounted the key, coil, and buzzer, leaving room for telegraph blanks. To this board were also attached flexible conductors having spring clips, by means of which connections could be made quickly with conveniently placed terminals of the ground, roof, and battery wires. The telephone receiver was held on the head with a spring, the flexible connecting wire being attached to the lap board, thus leaving the operator with both hands free.

The system, as shown in the sketch and elucidated by the text, represents the operation of train telegraphy in a simple form, but combining the main essentials of the art as it was successfully and commercially practised for a number of years after Edison and Gilliland entered the field. They elaborated the system in various ways, making it more complete; but it has not been deemed necessary to enlarge further upon the technical minutiæ of the art for the purpose of this work.

XV

KINETOGRAPH AND PROJECTING KINETOSCOPE

ALTHOUGH many of the arts in which Edison has been a pioneer have been enriched by his numerous inventions and patents, which were subsequent to those of a fundamental nature, the (so-called) motion-picture art is an exception, as the following, together with three other additional patents,[1] comprise all that he has taken out on this subject: United States Patent No. 589,168, issued August 31, 1897, reissued in two parts—namely, No. 12,037, under date of September 30, 1902, and No. 12,192, under date of January 12, 1904. Application filed August 24, 1891.

There is nothing surprising in this, however, as the possibility of photographing and reproducing actual scenes of animate life are so thoroughly exemplified and rendered practicable by the apparatus and methods disclosed in the patents above cited, that these basic inventions in themselves practically constitute the art—its development proceeding mainly along the line of manufacturing details. That such a view of his work is correct, the highest criterion—commercial expediency—bears witness; for in spite of the fact that the courts have somewhat narrowed the broad claims of Edison's patents by reason of the investigations of earlier experimenters, practically all the immense amount of commercial work that is done in the motion-picture field to-day is accomplished through the use of apparatus and methods licensed under the Edison patents.

The philosophy of this invention having already been described in Chapter XXI, it will be unnecessary to repeat it here. Suffice it to say by way of reminder that it is founded upon the physiological phenomenon known as the persistence of vision, through which a series of sequential

[1] No. 491,993, issued February 21, 1893; No. 493,426, issued March 14, 1893; No. 772,647, issued October 18, 1904.

photographic pictures of animate motion projected upon a screen in rapid succession will reproduce to the eye all the appearance of the original movements.

Edison's work in this direction comprised the invention not only of a special form of camera for making original photographic exposures from a single point of view with very great rapidity, and of a machine adapted to effect the reproduction of such pictures in somewhat similar manner, but also of the conception and invention of a continuous, uniform, and evenly spaced tape-like film, so absolutely essential for both the above objects.

The mechanism of such a camera, as now used, consists of many parts assembled in such contiguous proximity to each other that an illustration from an actual machine would not help to clearness of explanation to the general reader. Hence, a diagram showing a sectional view of a simple form of such a camera is presented below.

In this diagram, *A* represents an outer light-tight box

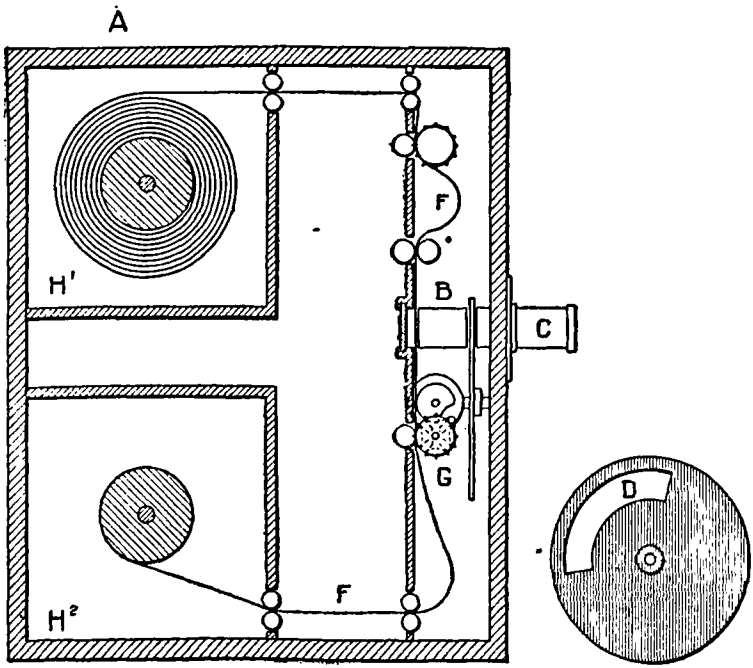

FIG. 1

containing a lens, C, and the other necessary mechanism for making the photographic exposures, H^1 and H^2 being cases for holding reels of film before and after exposure, F the long, tape-like film, G a sprocket whose teeth engage in perforations on the edges of the film, such sprocket being adapted to be revolved with an intermittent or step-by-step movement by hand or by motor, and B a revolving shutter having an opening and connected by gears with G, and arranged to expose the film during the periods of rest. A full view of this shutter is also represented, with its opening, D, in the small illustration to the right.

In practice, the operation would be somewhat as follows, generally speaking: The lens would first be focussed on the animate scene to be photographed. On turning the main shaft of the camera the sprocket, G, is moved intermittently, and its teeth, catching in the holes in the sensitized film, draws it downward, bringing a new portion of its length in front of the lens, the film then remaining stationary for an instant. In the mean time, through gearing connecting the main shaft with the shutter, the latter is rotated, bringing its opening, D, coincident with the lens, and therefore exposing the film while it is stationary, after which the film again moves forward. So long as the action is continued these movements are repeated, resulting in a succession of enormously rapid exposures upon the film during its progress from reel H^1 to its automatic rewinding on reel H^2. While the film is passing through the various parts of the machine it is guided and kept straight by various sets of rollers between which it runs, as indicated in the diagram.

By an ingenious arrangement of the mechanism, the film moves intermittently so that it may have a much longer period of rest than of motion. As in practice the pictures are taken at a rate of twenty or more per second, it will be quite obvious that each period of rest is infinitesimally brief, being generally one-thirtieth of a second or less. Still it is sufficient to bring the film to a momentary condition of complete rest, and to allow for a maximum time of exposure, comparatively speaking, thus providing means for taking clearly defined pictures. The negatives so obtained are developed in the regular way, and the positive prints subsequently made from them are used for reproduction.

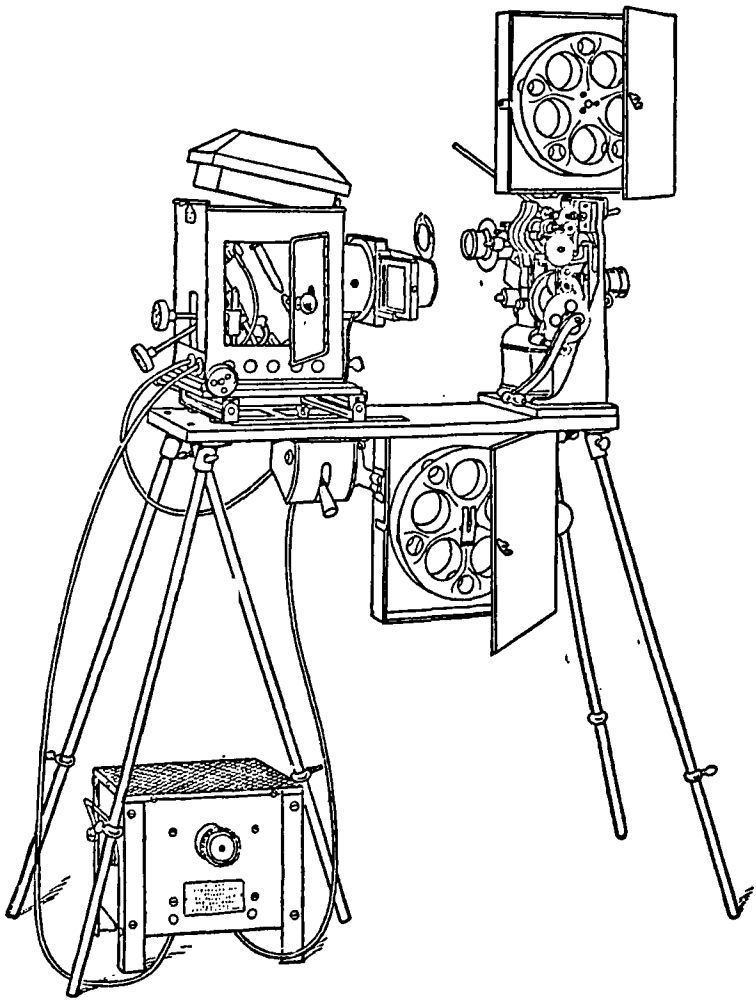

FIG. 2

The reproducing machine, or, as it is called in practice, the Projecting Kinetoscope, is quite similar so far as its general operations in handling the film are concerned. In appearance it is somewhat different; indeed, it is in two parts, the one containing the lighting arrangements and condensing lens, and the other embracing the mechanism and objective

lens. The "taking" camera must have its parts enclosed in a light-tight box, because of the undeveloped, sensitized film, but the projecting kinetoscope, using only a fully developed positive film, may, and, for purposes of convenient operation, must be accessibly open. The illustration (Fig. 2) will show the projecting apparatus as used in practice.

The philosophy of reproduction is very simple, and is illustrated diagrammatically in Fig. 3, reference letters being the

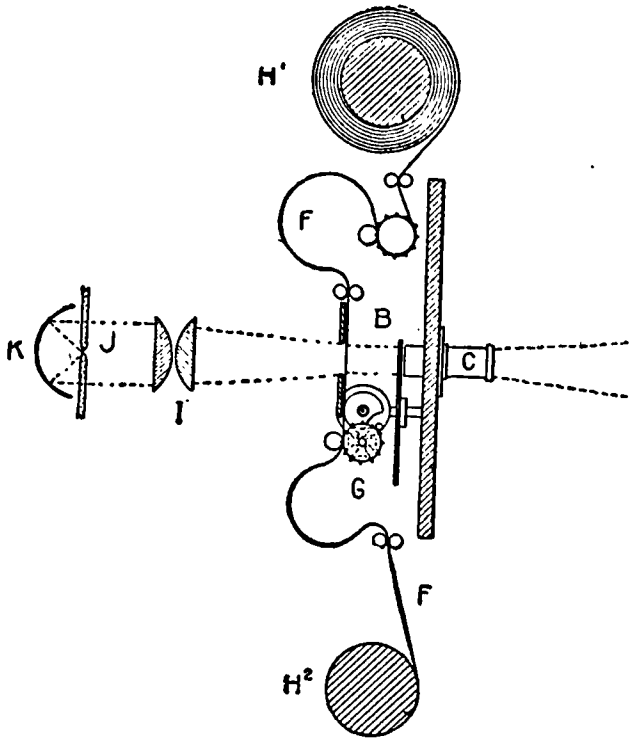

FIG. 3

same as in Fig. 1. As to the additional reference letters, *I* is a condenser, *J* the source of light, and *K* a reflector.

The positive film is moved intermittently but swiftly throughout its length between the objective lens and a beam of light coming through the condenser, being exposed by the shutter during the periods of rest. This results in a pro-

jection of the photographs upon a screen in such rapid succession as to present an apparently continuous photograph of the successive positions of the moving objects, which, therefore, appear to the human eye to be in motion.

The first claim of Reissue Patent No. 12,192 describes the film. It reads as follows:

"An unbroken transparent or translucent tape-like photographic film having thereon uniform, sharply defined, equidistant photographs of successive positions of an object in motion as observed from a single point of view at rapidly recurring intervals of time, such photographs being arranged in a continuous straight-line sequence, unlimited in number save by the length of the film, and sufficient in number to represent the movements of the object throughout an extended period of time."

XVI

EDISON'S ORE-MILLING INVENTIONS

THE wide range of Edison's activities in this department of the arts is well represented in the diversity of the numerous patents that have been issued to him from time to time. These patents are between fifty and sixty in number, and include magnetic ore separators of ten distinct types; also breaking, crushing, and grinding rolls, conveyors, dust-proof bearings, screens, driers, mixers, bricking apparatus and machines, ovens, and processes of various kinds.

A description of the many devices in each of these divisions would require more space than is available; hence, we shall confine ourselves to a few items of predominating importance, already referred to in the narrative, commencing with the fundamental magnetic ore separator, which was covered by United States Patent No. 228,329, issued June 1, 1880.

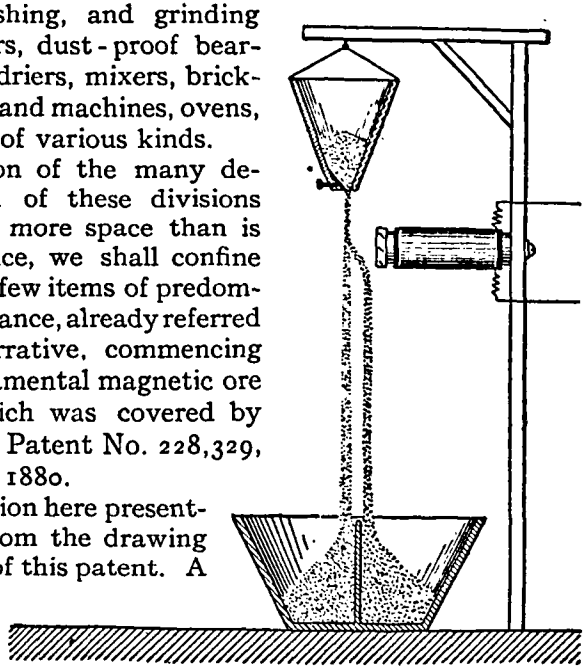

FIG. 1

The illustration here presented is copied from the drawing forming part of this patent. A hopper with adjustable feed is supported several feet above a bin having a central partition. Almost midway between the hopper and the bin is placed an electromagnet whose

polar extension is so arranged as to be a little to one side of a stream of material falling from the hopper. Normally, a stream of finely divided ore falling from the hopper would fall into that portion of the bin lying to the left of the partition. If, however, the magnet is energized from a source of current, the magnetic particles in the falling stream are attracted by and move toward the magnet, which is so placed with relation to the falling material that the magnetic particles cannot be attracted entirely to the magnet before gravity has carried them past. Hence, their trajectory is altered, and they fall on the right-hand side of the partition in the bin, while the non-magnetic portion of the stream continues in a straight line and falls on the other side, thus effecting a complete separation.

This simple but effective principle was the one employed by Edison in his great concentrating plant already described. In practice, the numerous hoppers, magnets, and bins were many feet in length; and they were arranged in batteries of varied magnetic strength, in order that the intermingled mass of crushed rock and iron ore might be more thoroughly separated by being passed through magnetic fields of successively increasing degrees of attracting power. Altogether there were about four hundred and eighty of these immense magnets in the plant, distributed in various buildings in batteries as above mentioned, the crushed rock containing the iron ore being delivered to them by conveyors, and the gangue and ore being taken away after separation by two other conveyors and delivered elsewhere. The magnetic separators at first used by Edison at this plant were of the same generality as the ones employed some years previously in the separation of sea-shore sand, but greatly enlarged and improved. The varied experiences gained in the concentration of vast quantities of ore led naturally to a greater development, and several new types and arrangements of magnetic separators were evolved and elaborated by him from first to last, during the progress of the work at the concentrating plant.

The magnetic separation of iron from its ore being the foundation idea of the inventions now under discussion, a consideration of the separator has naturally taken precedence over those of collateral but inseparable interest. The ore-

bearing rock, however, must first be ground to powder before it can be separated; hence, we will now begin at the root of this operation and consider the "giant rolls," which Edison devised for breaking huge masses of rock. In his application for United States Patent No. 672,616, issued April 23, 1901, applied for on July 16, 1897, he says: "The object of my invention is to produce a method for the breaking of rock which will be simple and effective, will not require the hand-sledging or blasting of the rock down to pieces of moderate size, and will involve the consumption of a small amount of power."

While this quotation refers to the method as "simple," the patent under consideration covers one of the most bold and daring projects that Edison has ever evolved. He proposed to eliminate the slow and expensive method of breaking large boulders manually, and to substitute therefor momentum and kinetic energy applied through the medium of massive machinery, which, in a few seconds, would break into small pieces a rock as big as an ordinary upright cottage piano, and weighing as much as six tons. Engineers to whom Edison communicated his ideas were unanimous in declaring the thing an impossibility; it was like driving two express-trains into each other at full speed to crack a great rock placed between them; that no practical machinery could be built to stand the terrific impact and strains. Edison's convictions were strong, however, and he persisted. The experiments were of heroic size, physically and financially, but after a struggle of several years and an expenditure of about $100,000, he realized the correctness and practicability of his plans in the success of the giant rolls, which were the outcome of his labors.

The giant rolls consist of a pair of iron cylinders of massive size and weight, with removable wearing plates having irregular surfaces formed by projecting knobs. These rolls are mounted side by side in a very heavy frame (leaving a gap of about fourteen inches between them), and are so belted up with the source of power that they run in opposite directions. The giant rolls described by Edison in the above-named patent as having been built and operated by him had a combined weight of 167,000 pounds, including all moving parts, which of themselves weighed about seventy tons, each

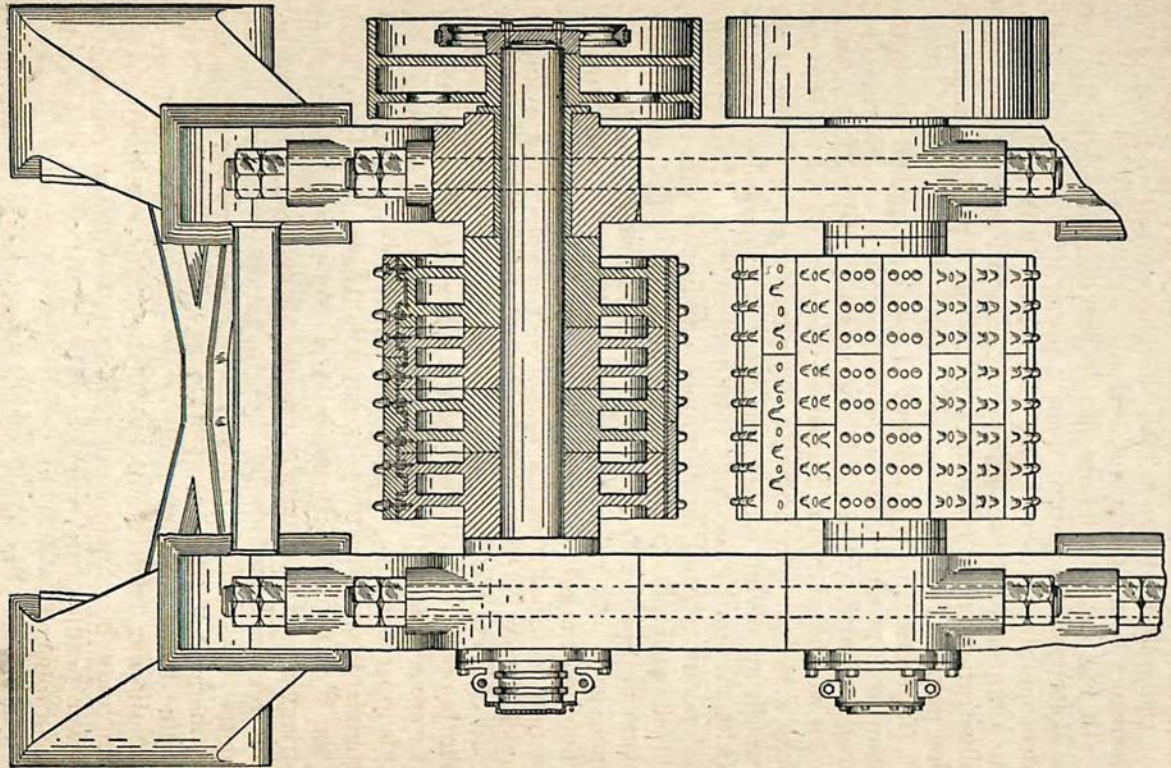

FIG. 2

roll being six feet in diameter and five feet long. A top view of the rolls is shown in the sketch, one roll and one of its bearings being shown in section.

In Fig. 2 the rolls are illustrated diagrammatically. As a sketch of this nature, even if given with a definite scale, does not always carry an adequate idea of relative dimensions to a non-technical reader, we present in Fig. 3 a perspective illustration of the giant rolls as installed in the concentrating plant.

In practice, a small amount of power is applied to run the giant rolls gradually up to a surface speed of several thousand feet a minute. When this high speed is attained, masses of rock weighing several tons in one or more pieces are dumped into a hopper which guides them into the gap between the rapidly revolving rolls. The effect is to partially arrest the swift motion of the rolls instantaneously, and thereby develop and expend an enormous amount of kinetic energy, which with pile-driver effect cracks the rocks and breaks them into pieces small enough to pass through the fourteen-inch gap. As the power is applied to the rolls through slipping friction-clutches, the speed of the driving-pulleys is not materially reduced; hence the rolls may again be quickly speeded up to their highest velocity while another load of rock is being hoisted in position to be dumped into the hopper. It will be obvious from the foregoing that if it were attempted to supply the great energy necessary for this operation by direct application of steam-power, an engine of enormous horse-power would be required, and even then it is doubtful if one could be constructed of sufficient strength to withstand the terrific strains that would ensue. But the work is done by the great momentum and kinetic energy obtained by speeding up these tremendous masses of metal, and then suddenly opposing their progress, the engine being relieved of all strain through the medium of the slipping friction-clutches. Thus, this cyclopean operation may be continuously conducted with an amount of power prodigiously inferior, in proportion, to the results accomplished.

The sketch (Fig. 4) showing a large boulder being dumped into the hopper, or roll-pit, will serve to illustrate the method of feeding these great masses of rock to the rolls, and will

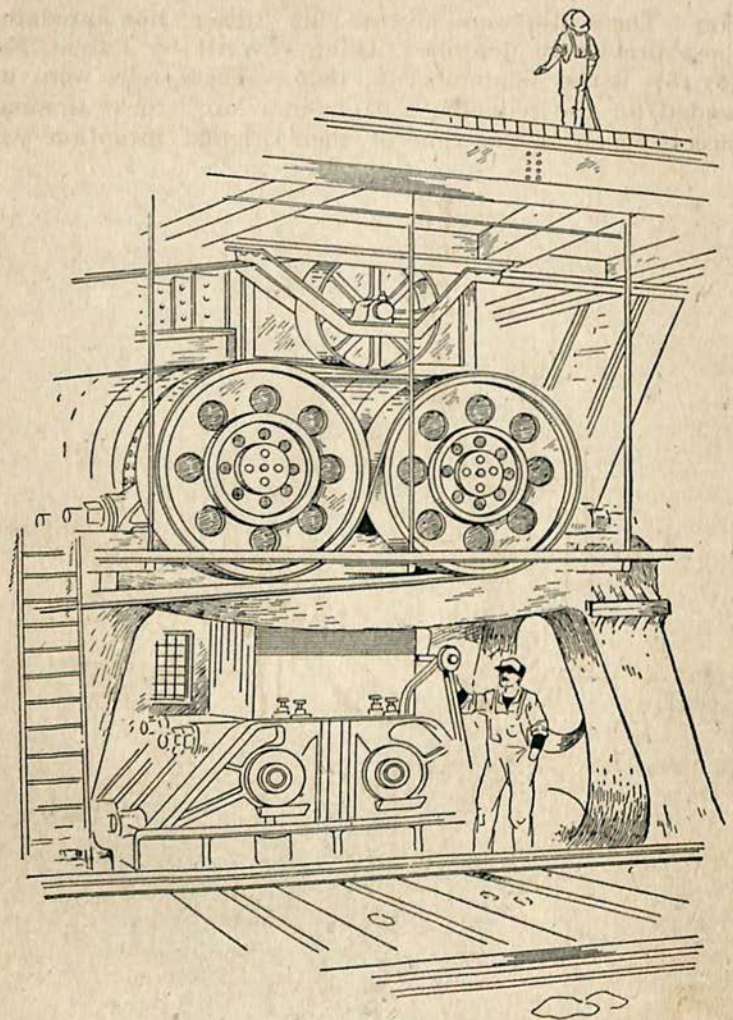

FIG. 3

also enable the reader to form an idea of the rapidity of the breaking operation, when it is stated that a boulder of the size represented would be reduced by the giant rolls to pieces a trifle larger than a man's head in a few seconds.

After leaving the giant rolls the broken rock passed on through other crushing-rolls of somewhat similar construc-

tion. These also were invented by Edison, but antedated those previously described, being covered by Patent No. 567,187, issued September 8, 1896. These rolls were intended for the reducing of "one-man-size" rocks to small pieces, which at the time of their original inception was

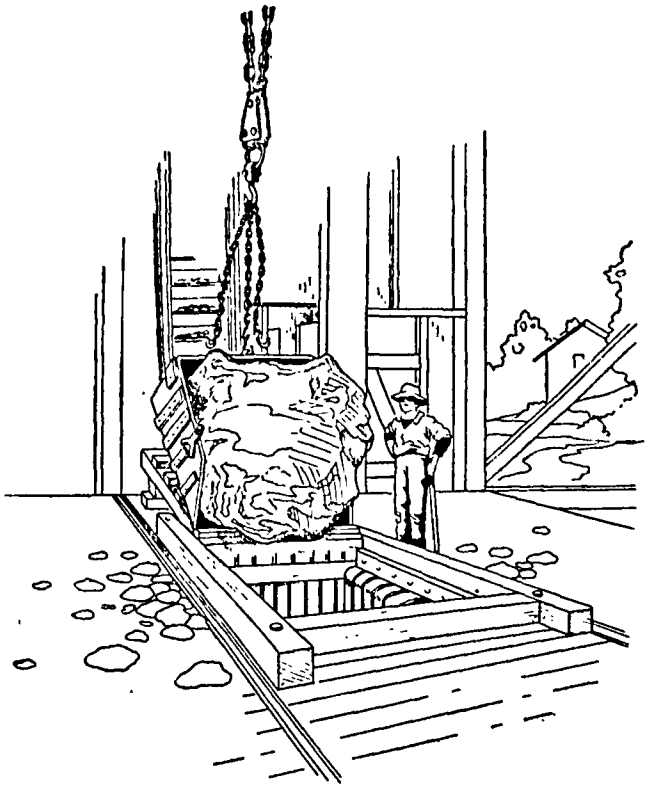

FIG. 4

about the standard size of similar machines. At the Edison concentrating plant the broken rock, after passing through these rolls, was further reduced in size by other rolls, and was then ready to be crushed to a fine powder through the medium of another remarkable machine devised by

NOTE.—Figs. 3 and 4 are reproduced from similar sketches on pages 84 and 85 of *McClure's Magazine* for November, 1897, by permission of S. S. McClure Co.

Edison to meet his ever-recurring and well-defined ideas of the utmost economy and efficiency. The best fine grinding-machines that it was then possible to obtain were so inefficient as to involve a loss of 82 per cent. of the power applied. The thought of such an enormous loss was unbearable, and he did not rest until he had invented and put into use an entirely new grinding-machine, which was called the "three-high" rolls. The device was covered by a patent issued to him on November 21, 1899, No. 637,327. It was a most noteworthy invention, for it brought into the art not only a greater efficiency of grinding than had ever been dreamed of before, but also a tremendous economy by the saving of power; for whereas the previous efficiency had been 18 per cent. and the loss 82 per cent., Edison reversed these figures, and in his three-high rolls produced a working efficiency of 84 per cent., thus reducing the loss of power by friction to 16 per cent. A diagrammatic sketch of this remarkable machine is shown in Fig. 5, which shows a front elevation with the casings, hopper, etc., removed, and also shows above the rolls the rope and pulleys, the supports for which are also removed for the sake of clearness in the illustration.

For the convenience of the reader, in referring to Fig. 5, we will repeat the description of the three-high rolls, which is given on pages 487 and 488 of the preceding narrative.

In the two end-pieces of a heavy iron frame were set three rolls, or cylinders—one in the centre, another below, and the other above—all three being in a vertical line. These rolls were about three feet in diameter, made of cast-iron, and had face-plates of chilled-iron.[1] The lowest roll was set in a fixed bearing at the bottom of the frame, and, therefore, could only turn around on its axis. The middle and top rolls were free to move up or down from and toward the lower roll, and the shafts of the middle and upper rolls were set in a loose bearing which could slip up and down in the iron frame. It will be apparent, therefore, that any material which passed in between the top and the middle rolls, and the middle and bottom rolls, could be ground as fine as

[1] The faces of these rolls were smooth, but as three-high rolls came into use later in Edison's Portland cement operations the faces were corrugated so as to fit into each other, gear-fashion, to provide for a high rate of feed.

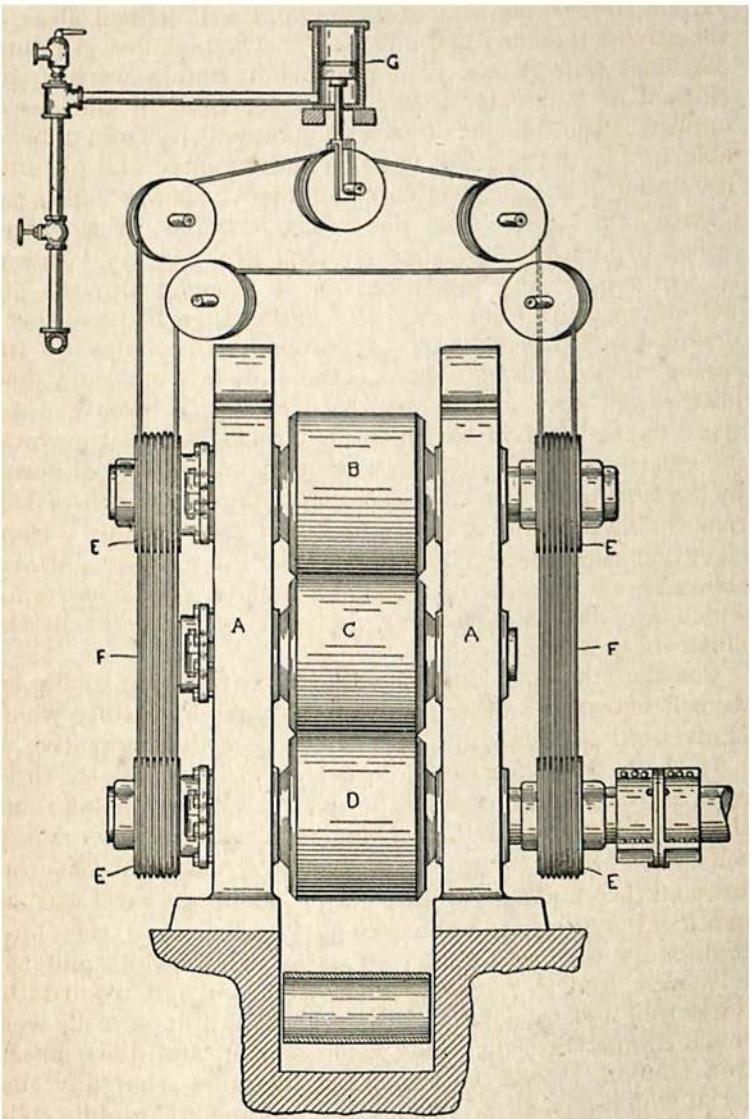

FIG. 5

A—Frame; *B*, *C*, *D*—Rolls; *E*—Sheaves; *F*—Wire rope; *G*—Air-cylinder.

might be desired, depending entirely upon the amount of pressure applied to the loose rolls. In operation the material passed first through the upper and middle rolls, and then between the middle and lowest rolls.

This pressure was applied in a most ingenious manner. On the ends of the shafts of the bottom and top rolls there were cylindrical sleeves, or bearings, having seven sheaves, in which was run a half-inch endless wire rope. This rope was wound seven times over the sheaves as above, and led upward and over a single-groove sheave, which was operated by the piston of an air-cylinder, and in this manner the pressure was applied to the rolls. It will be seen, therefore, that the system consisted in a single rope passed over sheaves and so arranged that it could be varied in length, thus providing for elasticity in exerting pressure and regulating it as desired. The efficiency of this system was incomparably greater than that of any other known crusher or grinder, for while a pressure of one hundred and twenty-five thousand pounds could be exerted by these rolls, friction was almost entirely eliminated, because the upper and lower roll bearings turned with the rolls and revolved in the wire rope, which constituted the bearing proper.

Several other important patents have been issued to Edison for crushing and grinding rolls, some of them being for elaborations and improvements of those above described; but all covering methods of greater economy and effectiveness in rock-grinding.

Edison's work on conveyors during the period of his ore-concentrating labors was distinctively original, ingenious, and far in advance of the times. His conception of the concentrating problem was broad and embraced an entire system, of which a principal item was the continuous transfer of enormous quantities of material from place to place at the lowest possible cost. As he contemplated the concentration of six thousand tons daily, the expense of manual labor to move such an immense quantity of rock, sand, and ore would be absolutely prohibitive. Hence, it became necessary to invent a system of conveyors that would be capable of transferring this mass of material from one place to another. And not only must these conveyors be capable of carrying the material, but they must also be devised so

that they would automatically receive and discharge their respective loads at appointed places. Edison's ingenuity, engineering ability, and inventive skill were equal to the task, however, and were displayed in a system and variety of conveyors that in practice seemed to act with almost human discrimination. When fully installed throughout the plant, they automatically transferred daily a mass of material equal to about one hundred thousand cubic feet, from mill to mill, covering about a mile in the transit. Up and down, winding in and out, turning corners, delivering material from one to another, making a number of loops in the drying-oven, filling up bins and passing on to the next when they were full, these conveyors in automatic action seemingly played their part with human intelligence, which was in reality the reflection of the intelligence and ingenuity that had originally devised them and set them in motion.

Six of Edison's patents on conveyors include a variety of devices that have since came into broad general use for similar work, and have been the means of effecting great economies in numerous industries of widely varying kinds. Interesting as they are, however, we shall not attempt to describe them in detail, as the space required would be too great. They are specified in the list of patents following this Appendix, and may be examined in detail by any interested student.

In the same list will also be found a large number of Edison's patents on apparatus and methods of screening, drying, mixing, and briquetting, as well as for dust-proof bearings, and various types and groupings of separators, all of which were called forth by the exigencies and magnitude of his great undertaking, and without which he could not possibly have attained the successful physical results that crowned his labors. Edison's persistence in reducing the cost of his operations is noteworthy in connection with his screening and drying inventions, in which the utmost advantage is taken of the law of gravitation. With its assistance, which cost nothing, these operations were performed perfectly. It was only necessary to deliver the material at the top of the chambers, and during its natural descent it was screened or dried as the case might be.

All these inventions and devices, as well as those described

in detail above (except magnetic separators and mixing and briquetting machines), are being used by him to-day in the manufacture of Portland cement, as that industry presents many of the identical problems which presented themselves in relation to the concentration of iron ore.

XVII

THE LONG CEMENT KILN

IN this remarkable invention, which has brought about a striking innovation in a long-established business, we see another characteristic instance of Edison's incisive reasoning and boldness of conception carried into practical effect in face of universal opinions to the contrary.

For the information of those unacquainted with the process of manufacturing Portland cement, it may be stated that the material consists preliminarily of an intimate mixture of cement rock and limestone, ground to a very fine powder. This powder is technically known in the trade as "chalk," and is fed into rotary kilns and "burned"; that is to say, it is subjected to a high degree of heat obtained by the combustion of pulverized coal, which is injected into the interior of the kiln. This combustion effects a chemical decomposition of the chalk, and causes it to assume a plastic consistency and to collect together in the form of small spherical balls, which are known as "clinker." Kilns are usually arranged with a slight incline, at the upper end of which the chalk is fed in and gradually works its way down to the interior flame of burning fuel at the other end. When it arrives at the lower end, the material has been "burned," and the clinker drops out into a receiving chamber below. The operation is continuous, a constant supply of chalk passing in at one end of the kiln and a continuous dribble of clinker-balls dropping out at the other. After cooling, the clinker is ground into very fine powder, which is the Portland cement of commerce.

It is self-evident that an ideal kiln would be one that produced the maximum quantity of thoroughly clinkered material with a minimum amount of fuel, labor, and investment. When Edison was preparing to go into the cement

business, he looked the ground over thoroughly, and, after considerable investigation and experiment, came to the conclusion that prevailing conditions as to kilns were far from ideal.

The standard kilns then in use were about sixty feet in length, with an internal diameter of about five feet. In all rotary kilns for burning cement, the true clinkering operation takes place only within a limited portion of their total length, where the heat is greatest; hence the interior of the kiln may be considered as being divided longitudinally into two parts or zones—namely, the combustion, or clinkering, zone, and the zone of oncoming raw material. In the sixty-foot kiln the length of the combustion zone was about ten feet, extending from a point six or eight feet from the lower, or discharge, end to a point about eighteen feet from that end. Consequently, beyond that point there was a zone of only about forty feet, through which the heated gases passed and came in contact with the oncoming material, which was in movement down toward the clinkering zone. Since the bulk of oncoming material was small, the gases were not called upon to part with much of their heat, and therefore passed on up the stack at very high temperatures, ranging from 1500° to 1800° Fahr. Obviously, this heat was entirely lost.

An additional loss of efficiency arose from the fact that the material moved so rapidly toward the combustion zone that it had not given up all its carbon dioxide on reaching there; and by the giving off of large quantities of that gas within the combustion zone, perfect and economical combustion of coal could not be effected.

The comparatively short length of the sixty-foot kiln not only limited the amount of material that could be fed into it, but the limitation in length of the combustion zone militated against a thorough clinkering of the material, this operation being one in which the elements of time and proper heat are prime considerations. Thus the quantity of good clinker obtainable was unfavorably affected. By reason of these and other limitations and losses, it had been possible, in practice, to obtain only about two hundred and fifty barrels of clinker per day of twenty-four hours; and that with an expenditure for coal proportionately equal to about

29 to 33 per cent. of the quantity of clinker produced, even assuming that all the clinker was of good quality.

Edison realized that the secret of greater commercial efficiency and improvement of quality lay in the ability to handle larger quantities of material within a given time, and to produce a more perfect product without increasing cost or investment in proportion. His reasoning led him to the conclusion that this result could only be obtained through the use of a kiln of comparatively great length, and his investigations and experiments enabled him to decide upon a length of one hundred and fifty feet, but with an increase in diameter of only six inches to a foot over that of the sixty-foot kiln.

The principal considerations that influenced Edison in making this radical innovation may be briefly stated as follows:

First. The ability to maintain in the kiln a load from five to seven times greater than ordinarily employed, thereby tending to a more economical output.

Second. The combustion of a vastly increased bulk of pulverized coal and a greatly enlarged combustion zone, extending about forty feet longitudinally into the kiln—thus providing an area within which the material might be maintained in a clinkering temperature for a sufficiently long period to insure its being thoroughly clinkered from periphery to centre.

Third. By reason of such a greatly extended length of the zone of oncoming material (and consequently much greater bulk), the gases and other products of combustion would be cooled sufficiently between the combustion zone and the stack so as to leave the kiln at a comparatively low temperature. Besides, the oncoming material would thus be gradually raised in temperature instead of being heated a ruptly, as in the shorter kilns.

Fourth. The material having thus been greatly raised in temperature before reaching the combustion zone would have parted with substantially all its carbon dioxide, and therefore would not introduce into the combustion zone sufficient of that gas to disturb the perfect character of the combustion.

Fifth. On account of the great weight of the heavy load

in a long kiln, there would result the formation of a continuous plastic coating on that portion of the inner surface of the kiln where temperatures are highest. This would effectively protect the fire-brick lining from the destructive effects of the heat.

Such, in brief, were the essential principles upon which Edison based his conception and invention of the long kiln, which has since become so well known in the cement business.

Many other considerations of a minor and mechanical nature, but which were important factors in his solution of this difficult problem, are worthy of study by those intimately associated with or interested in the art. Not the least of the mechanical questions was settled by Edison's decision to make this tremendously long kiln in sections of cast-iron, with flanges, bolted together, and supported on rollers rotated by electric motors. Longitudinal expansion and thrust were also important factors to be provided for, as

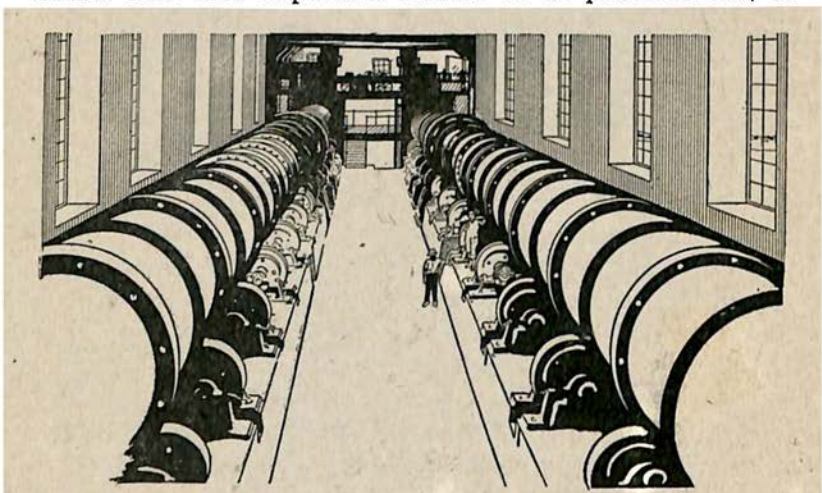

FIG. I

well as special devices to prevent the packing of the mass of material as it passed in and out of the kiln. Special provision was also made for injecting streams of pulverized coal in such manner as to create the largely extended zone of combustion. As to the details of these and many other in-

genious devices, we must refer the curious reader to the patents, as it is merely intended in these pages to indicate in a brief manner the main principles of Edison's notable inventions. The principal United States patent on the long kiln was issued October 24, 1905, No. 802,631.

That his reasonings and deductions were correct in this case have been indubitably proven by some years of experience with the long kiln in its ability to produce from eight hundred to one thousand barrels of good clinker every twenty-four hours, with an expenditure for coal proportionately equal to about only 20 per cent. of the quantity of clinker produced.

To illustrate the long cement kiln by diagram would convey but little to the lay mind, and we therefore present an illustration (Fig. 1) of actual kilns in perspective, from which sense of their proportions may be gathered.

XVIII

EDISON'S NEW STORAGE BATTERY

GENERICALLY considered, a "battery" is a device which generates electric current. There are two distinct species of battery, one being known as "primary," and the other as "storage," although the latter is sometimes referred to as a "secondary battery" or "accumulator." Every type of each of these two species is essentially alike in its general make-up; that is to say, every cell of battery of any kind contains at least two elements of different nature immersed in a more or less liquid electrolyte of chemical character. On closing the circuit of a primary battery an electric current is generated by reason of the chemical action which is set up between the electrolyte and the elements. This involves a gradual consumption of one of the elements and a corresponding exhaustion of the active properties of the electrolyte. By reason of this, both the element and the electrolyte that have been used up must be renewed from time to time, in order to obtain a continued supply of electric current.

The storage battery also generates electric current through chemical action, but without involving the constant reprimming with active materials to replace those consumed and exhausted as above mentioned. The term "storage," as applied to this species of battery, is, however, a misnomer, and has been the cause of much misunderstanding to non-technical persons. To the lay mind a "storage" battery presents itself in the aspect of a device in which electric energy is *stored*, just as compressed air is stored or accumulated in a tank. This view, however, is not in accordance with facts. It is exactly like the primary battery in the fundamental circumstance that its ability for generating electric current depends upon chemical action. In strict

terminology it is a "reversible" battery, as will be quite obvious if we glance briefly at its philosophy. When a storage battery is "charged," by having an electric current passed through it, the electric energy produces a chemical effect, adding oxygen to the positive plate, and taking oxygen away from the negative plate. Thus, the positive plate becomes oxidized, and the negative plate reduced. After the charging operation is concluded the battery is ready for use, and upon its circuit being closed through a translating device, such as a lamp or motor, a reversion ("discharge") takes place, the positive plate giving up its oxygen, and the negative plate being oxidized. These chemical actions result in the generation of an electric current as in a primary battery. As a matter of fact, the chemical actions and reactions in a storage battery are much more complex, but the above will serve to afford the lay reader a rather simple idea of the general result arrived at through the chemical activity referred to.

The storage battery, as a commercial article, was introduced into the market in the year 1881. At that time, and all through the succeeding years, until about 1905, there was only one type that was recognized as commercially practicable—namely, that known as the lead-sulphuric-acid cell, consisting of lead plates immersed in an electrolyte of dilute sulphuric acid. In the year last named Edison first brought out his new form of nickel-iron cell with alkaline electrolyte, as we have related in the preceding narrative. Early in the eighties, at Menlo Park, he had given much thought to the lead type of storage battery, and during the course of three years had made a prodigious number of experiments in the direction of improving it, probably performing more experiments in that time than the aggregate of those of all other investigators. Even in those early days he arrived at the conclusion that the lead-sulphuric-acid combination was intrinsically wrong, and did not embrace the elements of a permanent commercial device. He did not at that time, however, engage in a serious search for another form of storage battery, being tremendously occupied with his lighting system and other matters.

It may here be noted, for the information of the lay reader, that the lead-acid type of storage battery consists

of two or more lead plates immersed in dilute sulphuric acid and contained in a receptacle of glass, hard rubber, or other special material not acted upon by acid. The plates are prepared and "formed" in various ways, and the chemical actions are similar to those above stated, the positive plate being oxidized and the negative reduced during "charge," and reversed during "discharge." This type of cell, however, has many serious disadvantages inherent to its very nature. We will name a few of them briefly. Constant dropping of fine particles of active material often causes short-circuiting of the plates, and always necessitates occasional washing out of cells; deterioration through "sulphation" if discharge is continued too far or if recharging is not commenced quickly enough; destruction of adjacent metalwork by the corrosive fumes given out during charge and discharge; the tendency of lead plates to "buckle" under certain conditions; the limitation to the use of glass, hard rubber, or similar containers on account of the action of the acid; and the immense weight for electrical capacity. The tremendously complex nature of the chemical reactions which take place in the lead-acid storage battery also renders it an easy prey to many troublesome diseases.

In the year 1900, when Edison undertook to invent a storage battery, he declared it should be a new type into which neither sulphuric nor any other acid should enter. He said that the intimate and continued companionship of an acid and a metal was unnatural, and incompatible with the idea of durability and simplicity. He furthermore stated that lead was an unmechanical metal for a battery, being heavy and lacking stability and elasticity, and that as most metals were unaffected by alkaline solutions, he was going to experiment in that direction. The soundness of his reasoning is amply justified by the perfection of results obtained in the new type of storage battery bearing his name, and now to be described.

The essential technical details of this battery are fully described in an article written by one of Edison's laboratory staff, Walter E. Holland, who for many years has been closely identified with the inventor's work on this cell. The article was published in the *Electrical World*, New York, April 28, 1910; and the following extracts there-

from will afford an intelligent comprehension of this invention:

"The 'A' type Edison cell is the outcome of nine years of costly experimentation and persistent toil on the part of its inventor and his associates. . . .

"The Edison invention involves the use of an entirely new voltaic combination in an alkaline electrolyte, in place of the lead-lead-peroxide combination and acid electrolyte, characteristic of all other commercial storage batteries. Experience has proven that this not only secures durability and greater output per unit-weight of battery, but in addition there is eliminated a long list of troubles and diseases inherent in the lead-acid combination. . . .

"The principle on which the action of this new battery is based is the oxidation and reduction of metals in an electrolyte which does not combine with, and will not dissolve, either the metals or their oxides; and an electrolyte, furthermore, which, although decomposed by the action of the

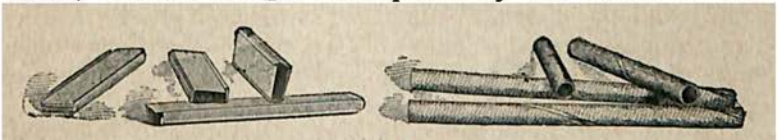

FIG. 1

battery, is immediately re-formed in equal quantity, and therefore in effect is a *constant* element, not changing in density or in conductivity.

"A battery embodying this basic principle will have features of great value where lightness and durability are desiderata. For instance, the electrolyte, being a constant factor, as explained, is not required in any fixed and large amount, as is the case with sulphuric acid in the lead battery; thus the cell may be designed with minimum distancing of plates and with the greatest economy of space that is consistent with safe insulation and good mechanical design. Again, the active materials of the electrodes being insoluble in, and absolutely unaffected by, the electrolyte, are not liable to any sort of chemical deterioration by action of the electrolyte—no matter how long continued. . . .

"The electrolyte of the Edison battery is a 21 per cent.

solution of potassium hydrate having, in addition, a small amount of lithium hydrate. The active metals of the electrodes—which will oxidize and reduce in this electrolyte without dissolution or chemical deterioration—are nickel and iron. These active elements are not put in the plates *as metals;* but one, nickel, in the form of a hydrate, and the other, iron, as an oxide.

"The containing cases of both kinds of active material (Fig. 1), and their supporting grids (Fig. 2), as well as the

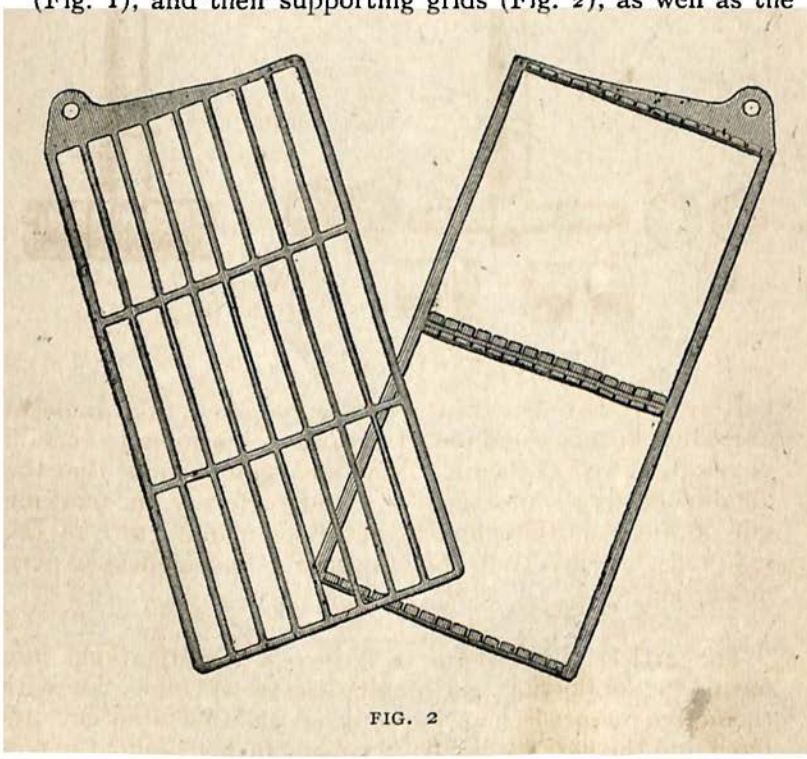

FIG. 2

bolts, washers, and nuts used in assembling (Fig. 3), and even the retaining can and its cover (Fig. 4), are all made of nickel-plated steel—a material in which lightness, durability, and mechanical strength are most happily combined, and a material beyond suspicion as to corrosion in an alkaline electrolyte. . . .

"An essential part of Edison's discovery of active ma-

terials for an alkaline storage battery was the *preparation* of these materials. Metallic powder of iron and nickel, or even oxides of these metals, prepared in the ordinary way, are not chemically active in a sufficient degree to work in a

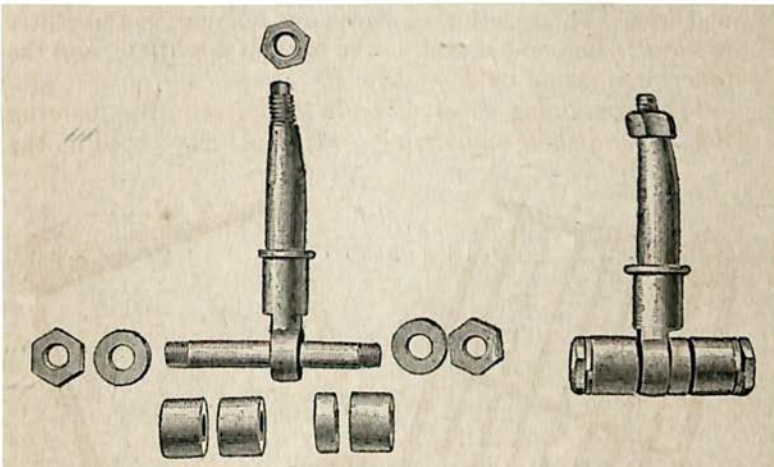

FIG. 3

battery. It is only when specially prepared iron oxide of exceeding fineness, and nickel hydrate conforming to certain physical, as well as chemical, standards can be made that the alkaline battery is practicable. Needless to say, the working out of the conditions and processes of manufacture of the materials has involved great ingenuity and endless experimentation."

The article then treats of Edison's investigations into means for supporting and making electrical connection with the active materials, showing some of the difficulties encountered and the various discoveries made in developing the perfected cell, after which the writer continues his description of the "A" type cell, as follows:

"It will be seen at once that the construction of the two kinds of plate is radically different. The negative or iron plate (Fig. 5) has the familiar flat-pocket construction. Each negative contains twenty-four pockets—a pocket being

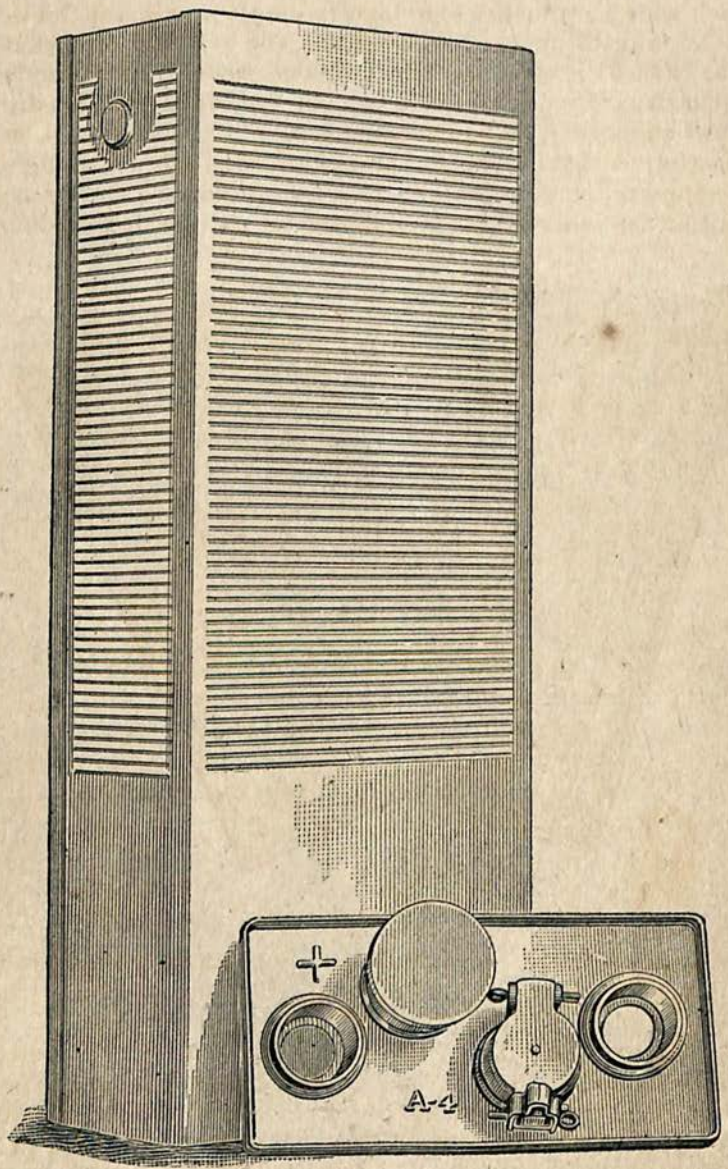

FIG. 4

½ inch wide by 3 inches long, and having a maximum thickness of a little more than ⅛ inch. The positive or nickel plate (Fig. 6) is seen to consist of two rows of round rods or pencils, thirty in number, held in a vertical position by a steel support-frame. The pencils have flat flanges at the ends (formed by closing in the metal case), by which they are supported and electrical connection is made. The frame is slit at the inner horizontal edges, and then folded in such

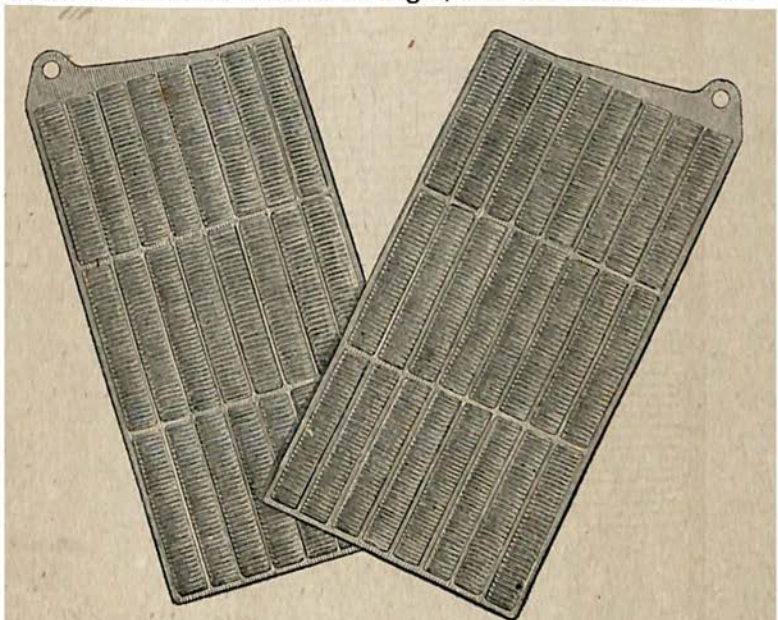

FIG. 5

a way as to make individual clamping-jaws for each end-flange. The clamping-in is done at great pressure, and the resultant plate has great rigidity and strength.

"The perforated tubes into which the nickel active material is loaded are made of nickel-plated steel of high quality. They are put together with a double-lapped spiral seam to give expansion-resisting qualities, and as an additional precaution small metal rings are slipped on the outside. Each tube is ¼ inch in diameter by 4⅛ inches long, and has eight of the reinforcing rings.

"It will be seen that the 'A' positive plate has been given the theoretically best design to prevent expansion and overcome trouble from that cause. Actual tests, long continued under very severe conditions, have shown that the construction is right, and fulfils the most sanguine expectations."

Mr. Holland in his article then goes on to explain the development of the nickel flakes as the conducting factor in the positive element, but as this has already been described in Chapter XXII, we shall pass on to a later point, where he says:

"An idea of the conditions inside a loaded tube can best be had by microscopic examination. Fig. 7 shows a magnified section of a regularly loaded tube which has been

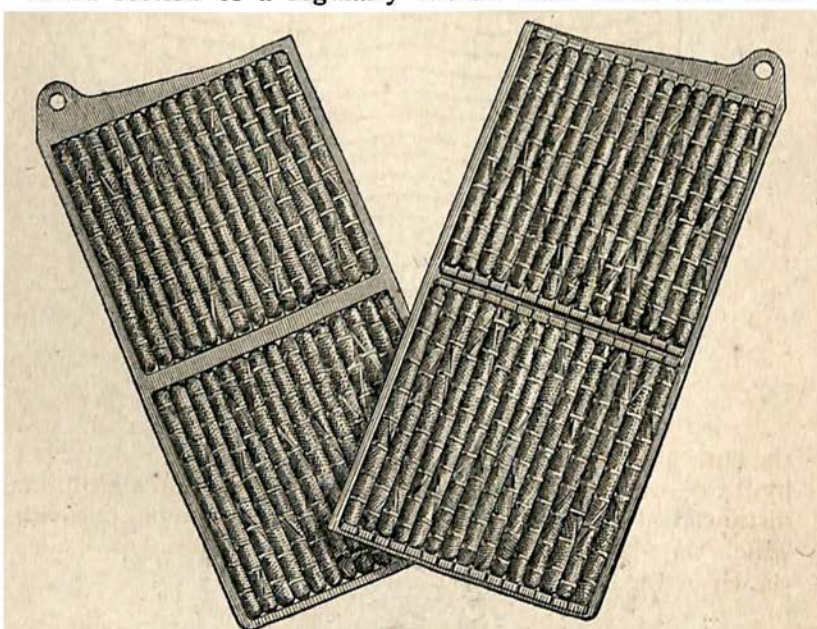

FIG. 6

sawed lengthwise. The vertical bounding walls are edges of the perforated metal containing tube; the dark horizontal lines are layers of nickel flake, while the light-colored thicker layers represent the nickel hydrate. It should be

noted that the layers of flake nickel extend practically unbroken across the tube and make contact with the metal wall at both sides. These metal layers conduct current to or from the active nickel hydrate in all parts of the tube very efficiently. There are about three hundred and fifty layers of each kind of material in a $4\frac{1}{8}$-inch tube, each layer of nickel hydrate being about 0.01 inch thick; so it will be seen that

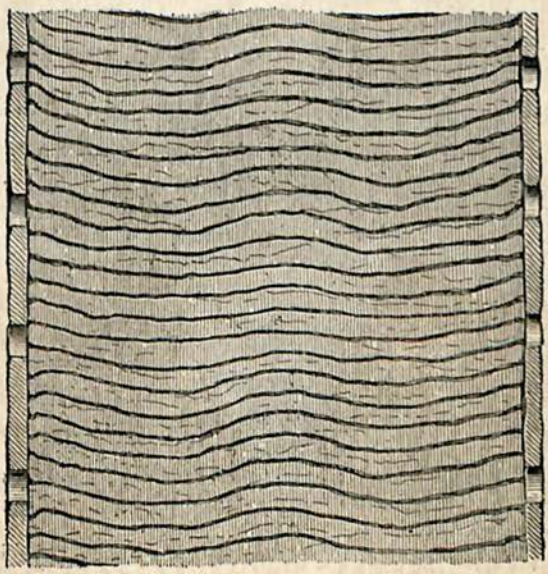

FIG. 7

the current does not have to penetrate very far into the nickel hydrate—one-half a layer's thickness being the maximum distance. The perforations of the containing tube, through which the electrolyte reaches the active material, are also shown in Fig. 7."

In conclusion, the article enumerates the chief characteristics of the Edison storage battery which fit it preeminently for transportation service, as follows: 1. No loss of active material, hence no sediment short-circuits. 2. No jar breakage. 3. Possibility of quick disconnection or replacement of any cell without employment of skilled

labor. 4. Impossibility of "buckling" and harmlessness of a dead short-circuit. 5. Simplicity of care required. 6. Durability of materials and construction. 7. Impossibility of "sulphation." 8. Entire absence of corrosive fumes. 9. Commercial advantages of light weight. 10. Duration on account of its dependability. 11. Its high practical efficiency.

XIX

EDISON'S POURED CEMENT HOUSE

THE inventions that have been thus far described fall into two classes—first, those that were fundamental in the great arts and industries which have been founded and established upon them, and, second, those that have entered into and enlarged other arts that were previously in existence. On coming to consider the subject now under discussion, however, we find ourselves, at this writing, on the threshold of an entirely new and undeveloped art of such boundless possibilities that its ultimate extent can only be a matter of conjecture.

Edison's concrete house, however, involves *two* main considerations. first of which was the conception or creation of the *idea*—vast and comprehensive—of providing imperishable and sanitary homes for the wage-earner by molding an entire house in one piece in a single operation, so to speak, and so simply that extensive groups of such dwellings could be constructed rapidly and at very reasonable cost. With this idea suggested, one might suppose that it would be a simple matter to make molds and pour in a concrete mixture. Not so, however. And here the second consideration presents itself. An ordinary cement mixture is composed of crushed stone, sand, cement, and water. If such a mixture be poured into deep molds the heavy stone and sand settle to the bottom. Should the mixture be poured into a horizontal mold, like the floor of a house, the stone and sand settle, forming an ununiform mass. It was at this point that invention commenced, in order to produce a concrete mixture which would overcome this crucial difficulty. Edison, with characteristic thoroughness, took up a line of investigation, and after a prolonged series of experiments succeeded in inventing a mixture that upon hardening re-

mained uniform throughout its mass. In the beginning of his experimentation he had made the conditions of test very severe by the construction of forms similar to that shown in the sketch below.

This consisted of a hollow wooden form of the dimensions indicated. The mixture was to be poured into the hopper

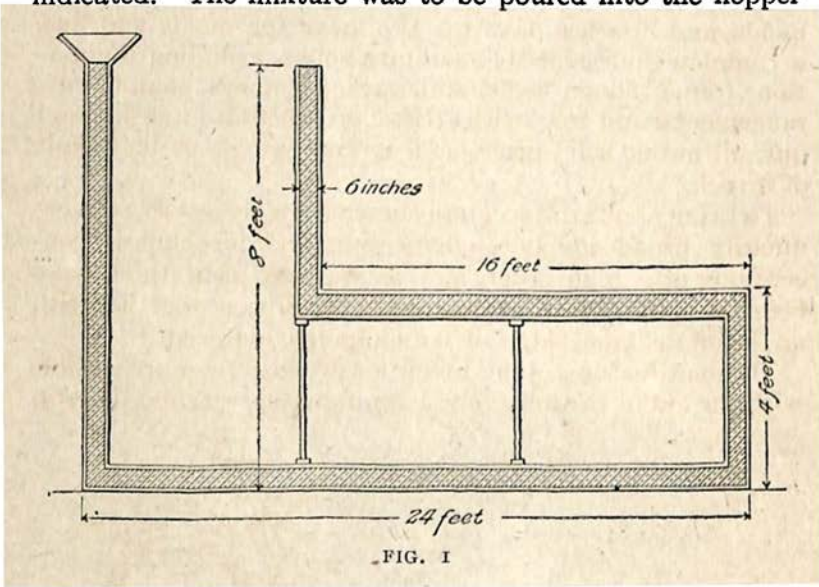

FIG. 1

until the entire form was filled, such mixture flowing down and along the horizontal legs and up the vertical members. It was to be left until the mixture was hard, and the requirement of the test was that there should be absolute uniformity of mixture and mass throughout. This was finally accomplished, and further invention then proceeded along engineering lines looking toward the devising of a system of molds with which practicable dwellings might be cast.

Edison's boldness and breadth of conception are well illustrated in his idea of a poured house, in which he displays his accustomed tendency to reverse accepted methods. In fact, it is this very reversal of usual procedure that renders it difficult for the average mind to instantly grasp the full significance of the principles involved and the results attained.

Up to this time we have been accustomed to see the erection of a house begun at the foundation and built up slowly,

piece by piece, of solid materials: first the outer frame, then the floors and inner walls, followed by the stairways, and so on up to the putting on of the roof. Hence, it requires a complete rearrangement of mental conceptions to appreciate Edison's proposal to build a house *from the top downward*, in a few hours, with a freely flowing material poured into molds, and in a few days to take away the molds and find a complete indestructible sanitary house, including foundation, frame, floors, walls, stairways, chimneys, sanitary arrangements, and roof, with artistic ornamentation inside and out, all in one solid piece, as if it were graven or bored out of a rock.

To bring about the accomplishment of a project so extraordinarily broad involves engineering and mechanical conceptions of a high order, and, as we have seen, these have been brought to bear on the subject by Edison, together with an intimate knowledge of compounded materials.

The main features of this invention are easily comprehensible with the aid of the following diagrammatic sectional sketch:

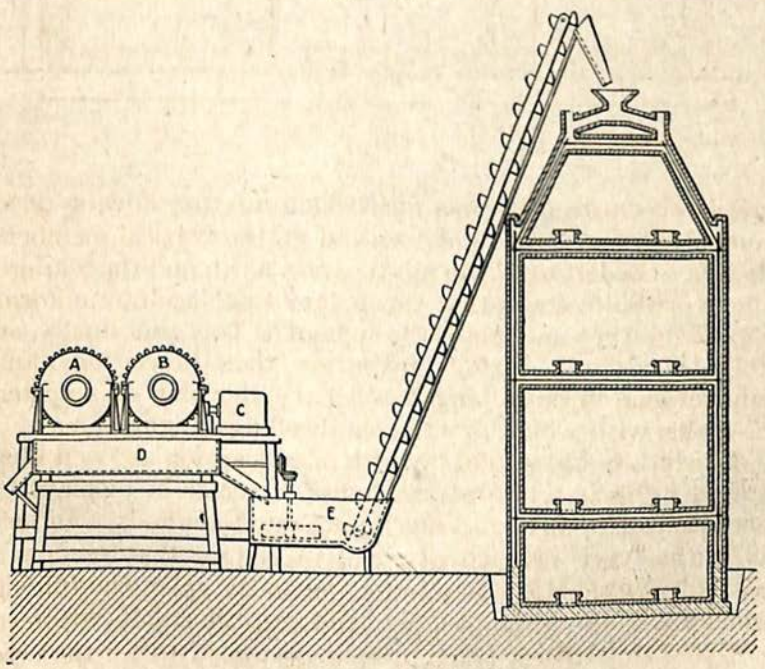

FIG. 2

It should be first understood that the above sketch is in broad outline, without elaboration; merely to illustrate the working principle; and while the upright structure on the right is intended to represent a set of molds in position to form a three-story house, with cellar, no regular details of such a building (such as windows, doors, stairways, etc.) are here shown, as they would only tend to complicate an explanation.

It will be noted that there are really two sets of molds, an inside and an outside set, leaving a space between them throughout. Although not shown in the sketch, there is in practice a number of bolts passing through these two sets of molds at various places to hold them together in their relative positions. In the open space between the molds there are placed steel rods for the purpose of reinforcement; while all through the entire structure provision is made for water and steam pipes, gas-pipes and electric-light wires being placed in appropriate positions as the molds are assembled.

At the centre of the roof there will be noted a funnel-shaped opening. Into this there is delivered by the endless chain of buckets shown on the left a continuous stream of a special free-flowing concrete mixture. This mixture descends by gravity, and gradually fills the entire space between the two sets of molds. The delivery of the material—or "pouring," as it is called—is continued until every part of the space is filled and the mixture is even with the tip of the roof, thus completing the pouring, or casting, of the house. In a few days afterward the concrete will have hardened sufficiently to allow the molds to be taken away, leaving an entire house, from cellar floor to the peak of the roof, complete in all its parts, even to mantels and picture molding, and requiring only windows and doors, plumbing, heating, and lighting fixtures to make it ready for habitation.

In the above sketch the concrete mixers, *A*, *B*, are driven by the electric motor, *C*. As the material is mixed it descends into the tank, *D*, and flows through a trough into a lower tank, *E*, in which it is constantly stirred, and from which it is taken by the endless chain of buckets and dumped into the funnel-shaped opening at the top of the molds, as above described.

The molds are made of cast-iron in sections of such size and weight as will be most convenient for handling, mostly in pieces not exceeding two by four feet in rectangular dimensions. The subjoined sketch shows an exterior view of several of these molds as they appear when bolted together,

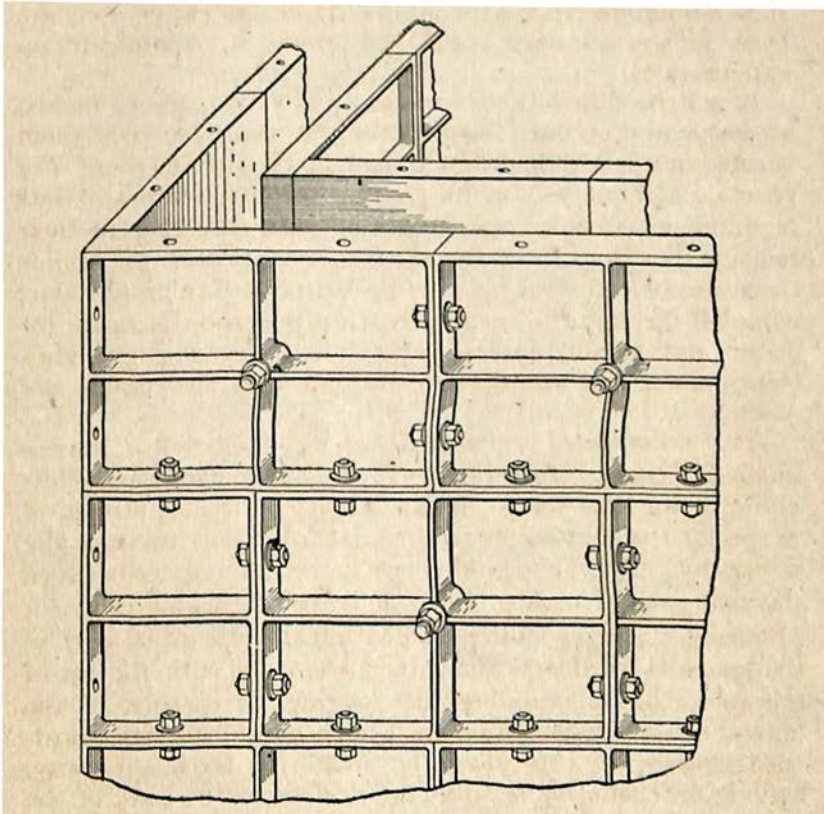

FIG. 3

the intersecting central portions representing ribs, which are included as part of the casting for purposes of strength and rigidity.

The molds represented above are those for straight work, such as walls and floors. Those intended for stairways, eaves, cornices, windows, doorways, etc., are much more complicated in design, although the same general principles are employed in their construction.

While the philosophy of pouring or casting a complete house in its entirety is apparently quite simple, the development of the engineering and mechanical questions involves the solution of a vast number of most intricate and complicated problems covering not only the building as a whole, but its numerous parts, down to the minutest detail. Safety, convenience, duration, and the practical impossibility of altering a one-piece solid dwelling are questions that must be met before its construction, and therefore Edison has proceeded calmly on his way toward the goal he has ever had clearly in mind, with utter indifference to the criticisms and jeers of those who, as "experts," have professed positive knowledge of the impossibility of his carrying out this daring scheme.

LIST OF UNITED STATES PATENTS

List of United States patents granted to Thomas A. Edison, arranged according to dates of execution of applications for such patents. This list shows the inventions as Mr. Edison has worked upon them from year to year

1868

NO.	TITLE OF PATENT	DATE EXECUTED
90,646	Electrographic Vote Recorder	Oct. 13, 1868

1869

91,527	Printing Telegraph (reissued October 25, 1870, numbered 4166, and August 5, 1873, numbered 5519)	Jan. 25, 1869
96,567	Apparatus for Printing Telegraph (reissued February 1, 1870, numbered 3820)	Aug. 17, 1869
96,681	Electrical Switch for Telegraph Apparatus	Aug. 27, 1869
102,320	Printing Telegraph—Pope and Edison (reissued April 17, 1877, numbered 7621, and December 9, 1884, numbered 10,542)	Sept. 16, 1869
103,924	Printing Telegraphs—Pope and Edison (reissued August 5, 1873)	

1870

103,035	Electromotor Escapement	Feb. 5, 1870
128,608	Printing Telegraph Instruments	May 4, 1870
114,656	Telegraph Transmitting Instruments	June 22, 1870
114,658	Electro Magnets for Telegraph Instruments	June 22, 1870
114,657	Relay Magnets for Telegraph Instruments	Sept. 6, 1870

NO.	TITLE OF PATENT	DATE EXECUTED
111,112	Electric Motor Governors	June 29, 1870
113,033	Printing Telegraph Apparatus	Nov. 17, 1870
	1871	
113,034	Printing Telegraph Apparatus	Jan. 10, 1871
123,005	Telegraph Apparatus	July 26, 1871
123,006	Printing Telegraph	July 26, 1871
123,984	Telegraph Apparatus	July 26, 1871
124,800	Telegraphic Recording Instruments	Aug. 12, 1871
121,601	Machinery for Perforating Paper for Telegraph Purposes	Aug. 16, 1871
126,535	Printing Telegraphs	Nov. 13, 1871
133,841	Typewriting Machine	Nov. 13, 1871
	1872	
126,532	Printing Telegraphs	Jan. 3, 1872
126,531	Printing Telegraphs	Jan. 17, 1872
126,534	Printing Telegraphs	Jan. 17, 1872
126,528	Type Wheels for Printing Telegraphs	Jan. 23, 1872
126,529	Type Wheels for Printing Telegraphs	Jan. 23, 1872
126,530	Printing Telegraphs	Feb. 14, 1872
126,533	Printing Telegraphs	Feb. 14, 1872
132,456	Apparatus for Perforating Paper for Telegraphic Use	March 15, 1872
132,455	Improvement in Paper for Chemical Telegraphs	April 10, 1872
133,019	Electrical Printing Machine	April 18, 1872
128,131	Printing Telegraphs	April 26, 1872
128,604	Printing Telegraphs	April 26, 1872
128,605	Printing Telegraphs	April 26, 1872
128,606	Printing Telegraphs	April 26, 1872
128,607	Printing Telegraphs	April 26, 1872
131,334	Rheotomes or Circuit Directors	May 6, 1872
134,867	Automatic Telegraph Instruments	May 8, 1872
134,868	Electro Magnetic Adjusters	May 8, 1872
130,795	Electro Magnets	May 9, 1872
131,342	Printing Telegraphs	May 9, 1872
131,341	Printing Telegraphs	May 28, 1872
131,337	Printing Telegraphs	June 10, 1872
131,340	Printing Telegraphs	June 10, 1872
131,343	Transmitters and Circuits for Printing Telegraph	June 10, 1872
131,335	Printing Telegraphs	June 15, 1872
131,336	Printing Telegraphs	June 15, 1872

NO.	TITLE OF PATENT	DATE EXECUTED
131,338	Printing Telegraphs	June 29, 1872
131,339	Printing Telegraphs	June 29, 1872
131,344	Unison Stops for Printing Telegraphs	June 29, 1872
134,866	Printing and Telegraph Instruments	Oct. 16, 1872
138,869	Printing Telegraphs	Oct. 16, 1872
142,999	Galvanic Batteries	Oct. 31, 1872
141,772	Automatic or Chemical Telegraphs	Nov. 5, 1872
135,531	Circuits for Chemical Telegraphs	Nov. 9, 1872
146,812	Telegraph Signal Boxes	Nov. 26, 1872
141,773	Circuits for Automatic Telegraphs	Dec. 12, 1872
141,776	Circuits for Automatic Telegraphs	Dec. 12, 1872
150,848	Chemical or Automatic Telegraphs	Dec. 12, 1872

1873

139,128	Printing Telegraphs	Jan. 21, 1873
139,129	Printing Telegraphs	Feb. 13, 1873
140,487	Printing Telegraphs	Feb. 13, 1873
140,489	Printing Telegraphs	Feb. 13, 1873
138,870	Printing Telegraphs	March 7, 1873
141,774	Chemical Telegraphs	March 7, 1873
141,775	Perforator for Automatic Telegraphs	March 7, 1873
141,777	Relay Magnets	March 7, 1873
142,688	Electric Regulators for Transmitting Instruments	March 7, 1873
156,843	Duplex Chemical Telegraphs	March 7, 1873
147,312	Perforators for Automatic Telegraphy	March 24, 1873
147,314	Circuits for Chemical Telegraphs	March 24, 1873
150,847	Receiving Instruments for Chemical Telegraphs	March 24, 1873
140,488	Printing Telegraphs	April 23, 1873
147,311	Electric Telegraphs	April 23, 1873
147,313	Chemical Telegraphs	April 23, 1873
147,917	Duplex Telegraphs	April 23, 1873
150,846	Telegraph Relays	April 23, 1873
160,405	Adjustable Electro Magnets for Relays, etc	April 23, 1873
162,633	Duplex Telegraphs	April 22, 1873
151,209	Automatic Telegraphy and Perforators Therefor	Aug. 25, 1873
160,402	Solutions for Chemical Telegraph Paper	Sept. 29, 1873
160,404	Solutions for Chemical Telegraph Paper	Sept. 29, 1873
160,580	Solutions for Chemical Telegraph Paper	Oct. 14, 1873
160,403	Solutions for Chemical Telegraph Paper	Oct. 29, 1873

1874

NO.	TITLE OF PATENT	DATE EXECUTED
154,788	District Telegraph Signal Box	April 2, 1874
168,004	Printing Telegraph	May 22, 1874
166,859	Chemical Telegraphy	June 1, 1874
166,860	Chemical Telegraphy	June 1, 1874
166,861	Chemical Telegraphy	June 1, 1874
158,787	Telegraph Apparatus	Aug. 7, 1874
172,305	Automatic Roman Character Telegraph	Aug. 7, 1874
173,718	Automatic Telegraphy	Aug. 7, 1874
178,221	Duplex Telegraphs	Aug. 19, 1874
178,222	Duplex Telegraphs	Aug. 19, 1874
178,223	Duplex Telegraphs	Aug. 19, 1874
180,858	Duplex Telegraphs	Aug. 19, 1874
207,723	Duplex Telegraphs	Aug. 19, 1874
480,567	Duplex Telegraphs	Aug. 19, 1874
207,724	Duplex Telegraphs	Dec. 14, 1874

1875

168,242	Transmitter and Receiver for Automatic Telegraph	Jan. 18, 1875
168,243	Automatic Telegraphs	Jan. 18, 1875
168,385	Duplex Telegraphs	Jan. 18, 1875
168,466	Solution for Chemical Telegraphs	Jan. 18, 1875
168,467	Recording Point for Chemical Telegraph	Jan. 18, 1875
195,751	Automatic Telegraphs	Jan. 18, 1875
195,752	Automatic Telegraphs	Jan. 19, 1875
171,273	Telegraph Apparatus	Feb. 11, 1875
169,972	Electric Signalling Instrument	Feb. 24, 1875
209,241	Quadruplex Telegraph Repeaters (reissued September 23, 1879, numbered 8906)	Feb. 24, 1875
168,465	Solution for Chemical Telegraphs	Aug. 14, 1875

1876

180,857	Autographic Printing	March 7, 1876
198,088	Telephonic Telegraphs	April 3, 1876
198,089	Telephonic or Electro Harmonic Telegraphs	April 3, 1876
182,996	Acoustic Telegraphs	May 9, 1876
186,330	Acoustic Electric Telegraphs	May 9, 1876
186,548	Telegraph Alarm and Signal Apparatus	May 9, 1876
198,087	Telephonic Telegraphs	May 9, 1876

NO.	TITLE OF PATENT	DATE EXECUTED
185,507	Electro Harmonic Multiplex Telegraph.	Aug. 16, 1876
200,993	Acoustic Telegraph	Aug. 26, 1876
235,142	Acoustic Telegraph	Aug. 26, 1876
200,032	Synchronous Movements for Electric Telegraphs	Oct. 30, 1876
200,994	Automatic Telegraph Perforator and Transmitter	Oct. 30, 1876
	1877	
205,370	Pneumatic Stencil Pens	Feb. 3, 1877
213,554	Automatic Telegraphs	Feb. 3, 1877
196,747	Stencil Pens	April 18, 1877
203,329	Perforating Pens	April 18, 1877
474,230	Speaking Telegraph	April 18, 1877
217,781	Sextuplex Telegraph	May 8, 1877
230,621	Addressing Machine	May 8, 1877
377,374	Telegraphy	May 8, 1877
453,601	Sextuplex Telegraph	May 31, 1877
452,913	Sextuplex Telegraph	May 31, 1877
512,872	Sextuplex Telegraph	May 31, 1877
474,231	Speaking Telegraph	July 9, 1877
203,014	Speaking Telegraph	July 16, 1877
208,299	Speaking Telegraph	July 16, 1877
203,015	Speaking Telegraph	Aug. 16, 1877
420,594	Quadruplex Telegraph	Aug. 16, 1877
492,789	Speaking Telegraph	Aug. 31, 1877
203,013	Speaking Telegraph	Dec. 8, 1877
203,018	Telephone or Speaking Telegraph	Dec. 8, 1877
200,521	Phonograph or Speaking Machine	Dec. 15, 1877
	1878	
203,019	Circuit for Acoustic or Telephonic Telegraphs	Feb. 13, 1878
201,760	Speaking Machines	Feb. 28, 1878
203,016	Speaking Machines	Feb. 28, 1878
203,017	Telephone Call Signals	Feb. 28, 1878
214,636	Electric Lights	Oct. 5, 1878
222,390	Carbon Telephones	Nov. 8, 1878
217,782	Duplex Telegraphs	Nov. 11, 1878
214,637	Thermal Regulator for Electric Lights	Nov. 14, 1878
210,767	Vocal Engines	Aug. 31, 1878
218,166	Magneto Electric Machines	Dec. 3, 1878
218,866	Electric Lighting Apparatus	Dec. 3, 1878
219,628	Electric Lights	Dec. 3, 1878

NO	TITLE OF PATENT	DATE EXECUTED
295,990	Typewriter	Dec. 4, 1878
218,167	Electric Lights	Dec. 31, 1878
	1879	
224,329	Electric Lighting Apparatus	Jan. 23, 1879
227,229	Electric Lights	Jan. 28, 1879
227,227	Electric Lights	Feb. 6, 1879
224,665	Autographic Stencils for Printing	March 10, 1879
227,679	Phonograph	March 19, 1879
221,957	Telephone	March 24, 1879
227,229	Electric Lights	April 12, 1879
264,643	Magneto Electric Machines	April 21, 1879
219,393	Dynamo Electric Machines	July 7, 1879
231,704	Electro Chemical Receiving Telephone	July 17, 1879
266,022	Telephone	Aug. 1, 1879
252,442	Telephone	Aug. 4, 1879
222,881	Magneto Electric Machines	Sept. 4, 1879
223,898	Electric Lamp	Nov. 1, 1879
	1880	
230,255	Electric Lamps	Jan. 28, 1880
248,425	Apparatus for Producing High Vacuums	Jan. 28, 1880
265,311	Electric Lamp and Holder for Same	Jan. 28, 1880
369,280	System of Electrical Distribution	Jan. 28, 1880
227,226	Safety Conductor for Electric Lights	March 10, 1880
228,617	Brake for Electro Magnetic Motors	March 10, 1880
251,545	Electric Meter	March 10, 1880
525,888	Manufacture of Carbons for Electric Lamps	March 10, 1880
264,649	Dynamo or Magneto Electric Machines	March 11, 1880
228,329	Magnetic Ore Separator	April 3, 1880
238,868	Manufacture of Carbons for Incandescent Electric Lamps	April 25, 1880
237,732	Electric Light	June 15, 1880
248,417	Manufacturing Carbons for Electric Lights	June 15, 1880
298,679	Treating Carbons for Electric Lights	June 15, 1880
248,430	Electro Magnetic Brake	July 2, 1880
265,778	Electro Magnetic Railway Engine	July 3, 1880
248,432	Magnetic Separator	July 26, 1880
239,150	Electric Lamp	July 27, 1880
239,372	Testing Electric Light Carbons—Edison and Batchelor	July 28, 1880
251,540	Carbon Electric Lamps	July 28, 1880

APPENDIX

NO.	TITLE OF PATENT	DATE EXECUTED
263,139	Manufacture of Carbons for Electric Lamps	July 28, 1880
434,585	Telegraph Relay	July 29, 1880
248,423	Carbonizer	July 30, 1880
263,140	Dynamo Electric Machines	July 30, 1880
248,434	Governor for Electric Engines	July 31, 1880
239,147	System of Electric Lighting	July 31, 1880
264,642	Electric Distribution and Translation System	Aug. 4, 1880
293,433	Insulation of Railroad Tracks used for Electric Circuits	Aug. 6, 1880
239,373	Electric Lamp	Aug. 7, 1880
239,745	Electric Lamp	Aug. 7, 1880
263,135	Electric Lamp	Aug. 7, 1880
251,546	Electric Lamp	Aug. 10, 1880
239,153	Electric Lamp	Aug. 11, 1880
351,855	Electric Lamp	Aug. 11, 1880
248,435	Utilizing Electricity as Motive Power	Aug. 12, 1880
263,132	Electro Magnetic Roller	Aug. 14, 1880
264,645	System of Conductors for the Distribution of Electricity	Sept. 1, 1880
240,678	Webermeter	Sept. 22, 1880
239,152	System of Electric Lighting	Oct. 14, 1880
239,148	Treating Carbons for Electric Lights	Oct. 15, 1880
238,098	Magneto Signalling Apparatus—Edison and Johnson	Oct. 21, 1880
242,900	Manufacturing Carbons for Electric Lamps	Oct. 21, 1880
251,556	Regulator for Magneto or Dynamo Electric Machines	Oct. 21, 1880
248,426	Apparatus for Treating Carbons for Electric Lamps	Nov. 5, 1880
239,151	Forming Enlarged Ends on Carbon Filaments	Nov. 19, 1880
12,631	Design Patent—Incandescent Electric Lamp	Nov. 23, 1880
239,149	Incandescing Electric Lamp	Dec. 3, 1880
242,896	Incandescent Electric Lamp	Dec. 3, 1880
242,897	Incandescent Electric Lamp	Dec. 3, 1880
248,565	Webermeter	Dec. 3, 1880
263,878	Electric Lamp	Dec. 3, 1880
239,154	Relay for Telegraphs	Dec. 11, 1880
242,898	Dynamo Electric Machine	Dec. 11, 1880
248,431	Preserving Fruit	Dec. 11, 1880

NO.	TITLE OF PATENT	DATE EXECUTED
265,777	Treating Carbons for Electric Lamps...	Dec. 11, 1880
239,374	Regulating the Generation of Electric Currents	Dec. 16, 1880
248,428	Manufacture of Incandescent Electric Lamps	Dec. 16, 1880
248,427	Apparatus for Treating Carbons for Electric Lamps.....	Dec. 21, 1880
248,437	Apparatus for Treating Carbons for Electric Lamps.....	Dec. 21, 1880
248,416	Manufacture of Carbons for Electric Lights	Dec. 30, 1880
	1881	
242,899	Electric Lighting.....	Jan. 19, 1881
248,418	Electric Lamp.....	Jan. 19, 1881
248,433	Vacuum Apparatus.....	Jan. 19, 1881
251,548	Incandescent Electric Lamps.....	Jan. 19, 1881
406,824	Electric Meter.....	Jan. 19, 1881
248,422	System of Electric Lighting.....	Jan. 20, 1881
431,018	Dynamo or Magneto Electric Machine..	Feb. 3, 1881
242,901	Electric Meter.....	Feb. 24, 1881
248,429	Electric Motor.....	Feb. 24, 1881
248,421	Current Regulator for Dynamo Electric Machine	Feb. 25, 1881
251,550	Magneto or Dynamo Electric Machines.	Feb. 26, 1881
251,555	Regulator for Dynamo Electric Machines	Feb. 26, 1881
482,549	Means for Controlling Electric Generation	March 2, 1881
248,420	Fixture and Attachment for Electric Lamps	March 7, 1881
251,553	Electric Chandeliers.....	March 7, 1881
251,554	Electric Lamp and Socket or Holder...	March 7, 1881
248,424	Fitting and Fixtures for Electric Lamps	March 8, 1881
248,419	Electric Lamp.....	March 30, 1881
251,542	System of Electric Light.....	April 19, 1881
263,145	Making Incandescents.....	April 19, 1881
266,447	Electric Incandescent Lamp.....	April 21, 1881
251,552	Underground Conductors.....	April 22, 1881
476,531	Electric Lighting System.....	April 22, 1881
248,436	Depositing Cell for Plating the Connections of Electric Lamps.....	May 17, 1881
251,539	Electric Lamp.....	May 17, 1881

APPENDIX

NO.	TITLE OF PATENT	DATE EXECUTED
263,136	Regulator for Dynamo or Magneto Electric Machine	May 17, 1881
251,557	Webermeter	May 19, 1881
263,134	Regulator for Magneto Electric Machine	May 19, 1881
251,541	Electro Magnetic Motor	May 20, 1881
251,544	Manufacture of Electric Lamps	May 20, 1881
251,549	Electric Lamp and the Manufacture thereof	May 20, 1881
251,558	Webermeter	May 20, 1881
341,644	Incandescent Electric Lamp	May 20, 1881
251,551	System of Electric Lighting	May 21, 1881
263,137	Electric Chandelier	May 21, 1881
263,141	Straightening Carbons for Incandescent Lamps	May 21, 1881
264,657	Incandescent Electric Lamps	May 21, 1881
251,543	Electric Lamp	May 24, 1881
251,538	Electric Light	May 27, 1881
425,760	Measurement of Electricity in Distribution System	May 31, 1881
251,547	Electrical Governor	June 2, 1881
263,150	Magneto or Dynamo Electric Machines	June 3, 1881
263,131	Magnetic Ore Separator	June 4, 1881
435,687	Means for Charging and Using Secondary Batteries	June 21, 1881
263,143	Magneto or Dynamo Electric Machines	June 24, 1881
251,537	Dynamo Electric Machine	June 25, 1881
263,147	Vacuum Apparatus	July 1, 1881
439,389	Electric Lighting System	July 1, 1881
263,149	Commutator for Dynamo or Magneto Electric Machines	July 22, 1881
479,184	Facsimile Telegraph—Edison and Kenny	July 26, 1881
400,317	Ore Separator	Aug. 11, 1881
425,763	Commutator for Dynamo Electric Machines	Aug. 20, 1881
263,133	Dynamo or Magneto Electric Machine	Aug. 24, 1881
263,142	Electrical Distribution System	Aug. 24, 1881
264,647	Dynamo or Magneto Electric Machines	Aug. 24, 1881
404,902	Electrical Distribution System	Aug. 24, 1881
257,677	Telephone	Sept. 7, 1881
266,021	Telephone	Sept. 7, 1881
263,144	Mold for Carbonizing Incandescents	Sept. 19, 1881
265,774	Maintaining Temperatures in Webermeters	Sept. 21, 1881

NO.	TITLE OF PATENT	DATE EXECUTED
264,648	Dynamo or Magneto Electric Machines.	Sept. 23, 1881
265,776	Electric Lighting System	Sept. 27, 1881
524,136	Regulator for Dynamo Electrical Machines	Sept. 27, 1881
273,715	Malleableizing Iron	Oct. 4, 1881
281,352	Webermeter	Oct. 5, 1881
446,667	Locomotives for Electric Railways	Oct. 11, 1881
288,318	Regulator for Dynamo or Magneto Electric Machines	Oct. 17, 1881
263,148	Dynamo or Magneto Electric Machines.	Oct. 25, 1881
264,646	Dynamo or Magneto Electric Machines.	Oct. 25, 1881
251,559	Electrical Drop Light	Oct. 25, 1881
266,793	Electric Distribution System	Oct. 25, 1881
358,599	Incandescent Electric Lamp	Oct. 29, 1881
264,673	Regulator for Dynamo Electric Machine	Nov. 3, 1881
263,138	Electric Arc Light	Nov. 7, 1881
265,775	Electric Arc Light	Nov. 7, 1881
297,580	Electric Arc Light	Nov. 7, 1881
263,146	Dynamo Magneto Electric Machines	Nov. 22, 1881
266,588	Vacuum Apparatus	Nov. 25, 1881
251,536	Vacuum Pump	Dec. 5, 1881
264,650	Manufacturing Incandescent Electric Lamps	Dec. 5, 1881
264,660	Regulator for Dynamo Electric Machines	Dec. 5, 1881
379,770	Incandescent Electric Lamp	Dec. 5, 1881
293,434	Incandescent Electric Lamp	Dec. 5, 1881
439,391	Junction Box for Electric Wires	Dec. 5, 1881
454,558	Incandescent Electric Lamp	Dec. 5, 1881
264,653	Incandescent Electric Lamp	Dec. 13, 1881
358,600	Incandescing Electric Lamp	Dec. 13, 1881
264,652	Incandescent Electric Lamp	Dec. 15, 1881
278,419	Dynamo Electric Machines	Dec. 15, 1881
	1882	
265,779	Regulator for Dynamo Electric Machines	Jan. 17, 1882
264,654	Incandescent Electric Lamps	Feb. 10, 1882
264,661	Regulator for Dynamo Electric Machines	Feb. 10, 1882
264,664	Regulator for Dynamo Electric Machines	Feb. 10, 1882
264,668	Regulator for Dynamo Electric Machines	Feb. 10, 1882

NO.	TITLE OF PATENT	DATE EXECUTED
264,669	Regulator for Dynamo Electric Machines	Feb. 10, 1882
264,671	Regulator for Dynamo Electric Machines	Feb. 10, 1882
275,613	Incandescing Electric Lamp	Feb. 10, 1882
401,646	Incandescing Electric Lamp	Feb. 10, 1882
264,658	Regulator for Dynamo Electric Machines	Feb. 28, 1882
264,659	Regulator for Dynamo Electric Machines	Feb. 28, 1882
265,780	Regulator for Dynamo Electric Machines	Feb. 28, 1882
265,781	Regulator for Dynamo Electric Machines	Feb. 28, 1882
278,416	Manufacture of Incandescent Electric Lamps	Feb. 28, 1882
379,771	Regulator for Dynamo Electric Machines	Feb. 28, 1882
272,034	Telephone	March 30, 1882
274,576	Transmitting Telephone	March 30, 1882
274,577	Telephone	March 30, 1882
264,662	Regulator for Dynamo Electric Machines	May 1, 1882
264,663	Regulator for Dynamo Electric Machines	May 1, 1882
264,665	Regulator for Dynamo Electric Machines	May 1, 1882
264,666	Regulator for Dynamo Electric Machines	May 1, 1882
268,205	Dynamo or Magneto Electric Machine	May 1, 1882
273,488	Regulator for Dynamo Electric Machines	May 1, 1882
273,492	Secondary Battery	May 19, 1882
460,122	Process of and Apparatus for Generating Electricity	May 19, 1882
466,460	Electrolytic Decomposition	May 19, 1882
264,672	Regulator for Dynamo Electric Machines	May 22, 1882
264,667	Regulator for Dynamo Electric Machines	May 22, 1882
265,786	Apparatus for Electrical Transmission of Power	May 22, 1882
273,828	System of Underground Conductors of Electric Distribution	May 22, 1882

NO.	TITLE OF PATENT	DATE EXECUTED
379,772	System of Electrical Distribution	May 22, 1882
274,292	Secondary Battery	June 3, 1882
281,353	Dynamo or Magneto Electric Machine	June 3, 1882
287,523	Dynamo or Magneto Electric Machine	June 3, 1882
365,509	Filament for Incandescent Electric Lamps	June 3, 1882
446,668	Electric Arc Light	June 3, 1882
543,985	Incandescent Conductor for Electric Lamps	June 3, 1882
264,651	Incandescent Electric Lamps	June 9, 1882
264,655	Incandescing Electric Lamps	June 9, 1882
264,670	Regulator for Dynamo Electric Machines	June 9, 1882
273,489	Turn-Table for Electric Railway	June 9, 1882
273,490	Electro Magnetic Railway System	June 9, 1882
401,486	System of Electric Lighting	June 12, 1882
476,527	System of Electric Lighting	June 12, 1882
439,390	Electric Lighting System	June 19, 1882
446,666	System of Electric Lighting	June 19, 1882
464,822	System of Distributing Electricity	June 19, 1882
304,082	Electrical Meter	June 24, 1882
274,296	Manufacture of Incandescents	July 5, 1882
264,656	Incandescent Electric Lamp	July 7, 1882
265,782	Regulator for Dynamo Electric Machines	July 7, 1882
265,783	Regulator for Dynamo Electric Machines	July 7, 1882
265,784	Regulator for Dynamo Electric Machines	July 7, 1882
265,785	Dynamo Electric Machine	July 7, 1882
273,494	Electrical Railroad	July 7, 1882
278,418	Translating Electric Currents from High to Low Tension	July 7, 1882
293,435	Electrical Meter	July 7, 1882
334,853	Mold for Carbonizing	July 7, 1882
339,278	Electric Railway	July 7, 1882
273,714	Magnetic Electric Signalling Apparatus	Aug. 5, 1882
282,287	Magnetic Electric Signalling Apparatus	Aug. 5, 1882
448,778	Electric Railway	Aug. 5, 1882
439,392	Electric Lighting System	Aug. 12, 1882
271,613	Manufacture of Incandescent Electric Lamps	Aug. 25, 1882

APPENDIX

NO.	TITLE OF PATENT	DATE EXECUTED
287,518	Manufacture of Incandescent Electric Lamps	Aug. 25, 1882
406,825	Electric Meter	Aug. 25, 1882
439,393	Carbonizing Chamber	Aug. 25, 1882
273,487	Regulator for Dynamo Electric Machines	Sept. 12, 1882
297,581	Incandescent Electric Lamp	Sept. 12, 1882
395,962	Manufacturing Electric Lamps	Sept. 16, 1882
287,525	Regulator for Systems of Electrical Distribution — Edison and C. L. Clarke	Oct. 4, 1882
365,465	Valve Gear	Oct. 5, 1882
317,631	Incandescent Electric Lamp	Oct. 7, 1882
307,029	Filament for Incandescent Lamp	Oct. 9, 1882
268,206	Incandescing Electric Lamp	Oct. 10, 1882
273,486	Incandescing Electric Lamp	Oct. 12, 1882
274,293	Electric Lamp	Oct. 14, 1882
275,612	Manufacture of Incandescent Electric Lamps	Oct. 14, 1882
430,932	Manufacture of Incandescent Electric Lamps	Oct. 14, 1882
271,616	Regulator for Dynamo Electric Machines	Oct. 16, 1882
543,986	Process for Treating Products Derived from Vegetable Fibres	Oct. 17, 1882
543,987	Filament for Incandescent Lamps	Oct. 17, 1882
271,614	Shafting	Oct. 19, 1882
271,615	Governor for Dynamo Electric Machines	Oct. 19, 1882
273,491	Regulator for Driving Engines of Electrical Generators	Oct. 19, 1882
273,493	Valve Gear for Electrical Generator Engines	Oct. 19, 1882
411,016	Manufacturing Carbon Filaments	Oct. 19, 1882
492,150	Coating Conductors for Incandescent Lamps	Oct. 19, 1882
273,485	Incandescent Electric Lamps	Oct. 26, 1882
317,632	Incandescent Electric Lamps	Oct. 26, 1882
317,633	Incandescent Electric Lamps	Oct. 26, 1882
287,520	Incandescing Conductor for Electric Lamps	Nov. 3, 1882
353,783	Incandescent Electric Lamp	Nov. 3, 1882
430,933	Filament for Incandescent Lamps	Nov. 3, 1882
274,294	Incandescent Electric Lamp	Nov. 13, 1882

NO.	TITLE OF PATENT	DATE EXECUTED
281,350	Regulator for Dynamo Electric Machines	Nov. 13, 1882
274,295	Incandescent Electric Lamp	Nov. 14, 1882
276,233	Electrical Generator and Motor	Nov. 14, 1882
274,290	System of Electrical Distribution	Nov. 20, 1882
274,291	Mold for Carbonizer	Nov. 28, 1882
278,413	Regulator for Dynamo Electric Machines	Nov. 28, 1882
278,414	Regulator for Dynamo Electric Machines	Nov. 28, 1882
287,519	Manufacturing Incandescing Electric Lamps	Nov. 28, 1882
287,524	Regulator for Dynamo Electric Machines	Nov. 28, 1882
438,298	Manufacture of Incandescent Electric Lamps	Nov. 28, 1882
276,232	Operating and Regulating Electrical Generators	Dec. 20, 1882
	1883	
278,415	Manufacture of Incandescent Electric Lamps	Jan. 13, 1883
278,417	Manufacture of Incandescent Electric Lamps	Jan. 13, 1883
281,349	Regulator for Dynamo Electric Machines	Jan. 13, 1883
283,985	System of Electrical Distribution	Jan. 13, 1883
283,986	System of Electrical Distribution	Jan. 13, 1883
459,835	Manufacture of Incandescent Electric Lamps	Jan. 13, 1883
13,940	Design Patent—Incandescing Electric Lamp	Feb. 13, 1883
280,727	System of Electrical Distribution	Feb. 13, 1883
395,123	Circuit Controller for Dynamo Machine	Feb. 13, 1883
287,521	Dynamo or Magneto Electric Machine	Feb. 17, 1883
287,522	Molds for Carbonizing	Feb. 17, 1883
438,299	Manufacture of Carbon Filaments	Feb. 17, 1883
446,669	Manufacture of Filaments for Incandescent Electric Lamps	Feb. 17, 1883
476,528	Incandescent Electric Lamp	Feb. 17, 1883
281,351	Electrical Generator	March 5, 1883
283,984	System of Electrical Distribution	March 5, 1883
287,517	System of Electrical Distribution	March 14, 1883
283,983	System of Electrical Distribution	April 5, 1883

APPENDIX

NO.	TITLE OF PATENT	DATE EXECUTED
354,310	Manufacture of Carbon Conductors	April 6, 1883
370,123	Electric Meter	April 6, 1883
411,017	Carbonizing Flask	April 6, 1883
370,124	Manufacture of Filament for Incandescing Electric Lamp	April 12, 1883
287,516	System of Electrical Distribution	May 8, 1883
341,839	Incandescent Electric Lamp	May 8, 1883
398,774	Incandescent Electric Lamp	May 8, 1883
370,125	Electrical Transmission of Power	June 1, 1883
370,126	Electrical Transmission of Power	June 1, 1883
370,127	Electrical Transmission of Power	June 1, 1883
370,128	Electrical Transmission of Power	June 1, 1883
370,129	Electrical Transmission of Power	June 1, 1883
370,130	Electrical Transmission of Power	June 1, 1883
370,131	Electrical Transmission of Power	June 1, 1883
438,300	Gauge for Testing Fibres for Incandescent Lamp Carbons	June 1, 1883
287,511	Electric Regulator	June 25, 1883
287,512	Dynamo Electric Machine	June 25, 1883
287,513	Dynamo Electric Machine	June 25, 1883
287,514	Dynamo Electric Machine	June 25, 1883
287,515	System of Electrical Distribution	June 25, 1883
297,582	Dynamo Electric Machine	June 25, 1883
328,572	Commutator for Dynamo Electric Machines	June 25, 1883
430,934	Electric Lighting System	June 25, 1883
438,301	System of Electric Lighting	June 25, 1883
297,583	Dynamo Electric Machines	July 27, 1883
304,083	Dynamo Electric Machines	July 27, 1883
304,084	Device for Protecting Electric Light Systems from Lightning	July 27, 1883
438,302	Commutator for Dynamo Electric Machine	July 27, 1883
476,529	System of Electrical Distribution	July 27, 1883
297,584	Dynamo Electric Machine	Aug. 8, 1883
307,030	Electrical Meter	Aug. 8, 1883
297,585	Incandescing Conductor for Electric Lamps	Sept. 14, 1883
297,586	Electrical Conductor	Sept. 14, 1883
435,688	Process and Apparatus for Generating Electricity	Sept. 14, 1883
476,922	Manufacture of Filaments for Incandescent Lamps	Sept. 14, 1883
490,953	Generating Electricity	Oct. 9, 1883

NO.	TITLE OF PATENT	DATE EXECUTED
293,432	Electrical Generator or Motor	Oct. 17, 1883
307,031	Electrical Indicator	Nov. 2, 1883
337,254	Telephone—Edison and Bergmann	Nov. 10, 1883
297,587	Dynamo Electric Machine	Nov. 15, 1883
298,954	Dynamo Electric Machine	Nov. 15, 1883
298,955	Dynamo Electric Machine	Nov. 15, 1883
304,085	System of Electrical Distribution	Nov. 15, 1883
509,517	System of Electrical Distribution	Nov. 15, 1883
425,761	Incandescent Lamp	Nov. 20, 1883
304,086	Incandescent Electric Lamp	Dec. 15, 1883
	1884	
298,956	Operating Dynamo Electric Machine	Jan. 5, 1884
304,087	Electrical Conductor	Jan. 12, 1884
395,963	Incandescent Lamp Filament	Jan. 22, 1884
526,147	Plating One Material with Another	Jan. 22, 1884
339,279	System of Electrical Distribution	Feb. 8, 1884
314,115	Chemical Stock Quotation Telegraph—Edison and Kenny	Feb. 9, 1884
436,968	Method and Apparatus for Drawing Wire	June 2, 1884
436,969	Apparatus for Drawing Wire	June 2, 1884
438,303	Arc Lamp	June 2, 1884
343,017	System of Electrical Distribution	June 27, 1884
391,595	System of Electric Lighting	July 16, 1884
328,573	System of Electric Lighting	Sept. 12, 1884
328,574	System of Electric Lighting	Sept. 12, 1884
328,575	System of Electric Lighting	Sept. 12, 1884
391,596	Incandescent Electric Lamp	Sept. 24, 1884
438,304	Electric Signalling Apparatus	Sept. 24, 1884
422,577	Apparatus for Speaking Telephones—Edison and Gilliland	Oct. 21, 1884
329,030	Telephone	Dec. 3, 1884
422,578	Telephone Repeater	Dec. 9, 1884
422,579	Telephone Repeater	Dec. 9, 1884
340,707	Telephonic Repeater	Dec. 9, 1884
340,708	Electrical Signalling Apparatus	Dec. 19, 1884
347,097	Electrical Signalling Apparatus	Dec. 19, 1884
478,743	Telephone Repeater	Dec. 31, 1884
	1885	
340,709	Telephone Circuit—Edison and Gilliland	Jan. 2, 1885
378,044	Telephone Transmitter	Jan. 9, 1885

APPENDIX

NO.	TITLE OF PATENT	DATE EXECUTED
348,114	Electrode for Telephone Transmitters..	Jan. 12, 1885
438,305	Fuse Block.....	Jan. 14, 1885
350,234	System of Railway Signalling —Edison and Gilliland.....	March 27, 1885
486,634	System of Railway Signalling—Edison and Gilliland.....	March 27, 1885
333,289	Telegraphy.....	April 27, 1885
333,290	Duplex Telegraphy.....	April 30, 1885
333,291	Way Station Quadruplex Telegraph....	May 6, 1885
465,971	Means for Transmitting Signals Electrically	May 14, 1885
422,072	Telegraphy.....	Oct. 7, 1885
437,422	Telegraphy.....	Oct. 7, 1885
422,073	Telegraphy.....	Nov. 12, 1885
422,074	Telegraphy.....	Nov. 24, 1885
435,689	Telegraphy.....	Nov. 30, 1885
438,306	Telephone—Edison and Gilliland.....	Dec. 22, 1885
350,235	Railway Telegraphy—Edison and Gilliland.....	Dec. 28, 1885
	1886	
406,567	Telephone	Jan. 28, 1886
474,232	Speaking Telegraph.....	Feb. 17, 1886
370,132	Telegraphy.....	May 11, 1886
411,018	Manufacture of Incandescent Lamps...	July 15, 1886
438,307	Manufacture of Incandescent Electric Lamps	July 15, 1886
448,779	Telegraph.....	July 15, 1886
411,019	Manufacture of Incandescent Electric Lamps	July 20, 1886
406,130	Manufacture of Incandescent Electric Lamps	Aug. 6, 1886
351,856	Incandescent Electric Lamp.....	Sept. 30, 1886
454,262	Incandescent Lamp Filaments.....	Oct. 26, 1886
466,400	Cut-Out for Incandescent Lamps—Edison and J. F. Ott.....	Oct. 26, 1886
484,184	Manufacture of Carbon Filaments.....	Oct. 26, 1886
490,954	Manufacture of Carbon Filaments for Electric Lamps.....	Nov. 2, 1886
438,308	System of Electrical Distribution.....	Nov. 9, 1886
524,378	System of Electrical Distribution.....	Nov. 9, 1886
365,978	System of Electrical Distribution.....	Nov. 22, 1886
369,439	System of Electrical Distribution.....	Nov. 22, 1886
384,830	Railway Signalling—Edison and Gilliland	Nov. 24, 1886

NO.	TITLE OF PATENT	DATE EXECUTED
379,944	Commutator for Dynamo Electric Machines	Nov. 26, 1886
411,020	Manufacture of Carbon Filaments	Nov. 26, 1886
485,616	Manufacture of Carbon Filaments	Dec. 6, 1886
485,615	Manufacture of Carbon Filaments	Dec. 6, 1886
525,007	Manufacture of Carbon Filaments	Dec. 6, 1886
369,441	System of Electrical Distribution	Dec. 10, 1886
369,442	System of Electrical Distribution	Dec. 16, 1886
369,443	System of Electrical Distribution	Dec. 16, 1886
484,185	Manufacture of Carbon Filaments	Dec. 20, 1886
534,207	Manufacture of Carbon Filaments	Dec. 20, 1886
373,584	Dynamo Electric Machine	Dec. 21, 1886
	1887	
468,949	Converter System for Electric Railways	Feb. 7, 1887
380,100	Pyromagnetic Motor	May 24, 1887
476,983	Pyromagnetic Generator	May 24, 1887
476,530	Incandescent Electric Lamp	June 1, 1887
377,518	Magnetic Separator	June 30, 1887
470,923	Railway Signalling	Aug. 9, 1887
545,405	System of Electrical Distribution	Aug. 26, 1887
380,101	System of Electrical Distribution	Sept. 13, 1887
380,102	System of Electrical Distribution	Sept. 14, 1887
470,924	Electric Conductor	Sept. 26, 1887
563,462	Method of and Apparatus for Drawing Wire	Oct. 17, 1887
385,173	System of Electrical Distribution	Nov. 5, 1887
506,215	Making Plate Glass	Nov. 9, 1887
382,414	Burnishing Attachments for Phonographs	Nov. 22, 1887
386,974	Phonograph	Nov. 22, 1887
430,570	Phonogram Blank	Nov. 22, 1887
382,416	Feed and Return Mechanism for Phonographs	Nov. 29, 1887
382,415	System of Electrical Distribution	Dec. 4, 1887
382,462	Phonogram Blanks	Dec. 5, 1887
	1888	
484,582	Duplicating Phonograms	Jan. 17, 1888
434,586	Electric Generator	Jan. 21, 1888
434,587	Thermo Electric Battery	Jan. 21, 1888
382,417	Making Phonogram Blanks	Jan. 30, 1888
389,369	Incandescing Electric Lamp	Feb. 2, 1888

APPENDIX

NO.	TITLE OF PATENT	DATE EXECUTED
382,418	Phonogram Blank	Feb. 20, 1888
390,462	Making Carbon Filaments	Feb. 20, 1888
394,105	Phonograph Recorder	Feb. 20, 1888
394,106	Phonograph Reproducer	Feb. 20, 1888
382,419	Duplicating Phonograms	March 3, 1888
425,762	Cut-Out for Incandescent Lamps	March 3, 1888
396,356	Magnetic Separator	March 19, 1888
393,462	Making Phonogram Blanks	April 28, 1888
393,463	Machine for Making Phonogram Blanks	April 28, 1888
393,464	Machine for Making Phonogram Blanks	April 28, 1888
534,208	Induction Converter	May 7, 1888
476,991	Method of and Apparatus for Separating Ores	May 9, 1888
400,646	Phonograph Recorder and Reproducer	May 22, 1888
488,190	Phonograph Reproducer	May 22, 1888
488,189	Phonograph	May 26, 1888
470,925	Manufacture of Filaments for Incandescent Electric Lamps	June 21, 1888
393,465	Preparing Phonograph Recording Surfaces	June 30, 1888
400,647	Phonograph	June 30, 1888
448,780	Device for Turning Off Phonogram Blanks	June 30, 1888
393,466	Phonograph Recorder	July 14, 1888
393,966	Recording and Reproducing Sounds	July 14, 1888
393,967	Recording and Reproducing Sounds	July 14, 1888
430,274	Phonogram Blank	July 14, 1888
437,423	Phonograph	July 14, 1888
450,740	Phonograph Recorder	July 14, 1888
485,617	Incandescent Lamp Filament	July 14, 1888
448,781	Turning-Off Device for Phonographs	July 16, 1888
400,648	Phonogram Blank	July 27, 1888
499,879	Phonograph	July 27, 1888
397,705	Winding Field Magnets	Aug. 31, 1888
435,690	Making Armatures for Dynamo Electric Machines	Aug. 31, 1888
430,275	Magnetic Separator	Sept. 12, 1888
474,591	Extracting Gold from Sulphide Ores	Sept. 12, 1888
397,280	Phonograph Recorder and Reproducer	Sept. 19, 1888
397,706	Phonograph	Sept. 29, 1888
400,649	Making Phonogram Blanks	Sept. 29, 1888
400,650	Making Phonogram Blanks	Oct. 15, 1888
406,568	Phonograph	Oct. 15, 1888
437,424	Phonograph	Oct. 15, 1888
393,968	Phonograph Recorder	Oct. 31, 1888

1889

NO.	TITLE OF PATENT	DATE EXECUTED
406,569	Phonogram Blank	Jan. 10, 1889
488,191	Phonogram Blank	Jan. 10, 1889
430,276	Phonograph	Jan. 12, 1889
406,570	Phonograph	Feb. 1, 1889
406,571	Treating Phonogram Blanks	Feb. 1, 1889
406,572	Automatic Determining Device for Phonographs	Feb. 1, 1889
406,573	Automatic Determining Device for Phonographs	Feb. 1, 1889
406,574	Automatic Determining Device for Phonographs	Feb. 1, 1889
406,575	Automatic Determining Device for Phonographs	Feb. 1, 1889
406,576	Phonogram Blank	Feb. 1, 1889
430,277	Automatic Determining Device for Phonographs	Feb. 1, 1889
437,425	Phonograph Recorder	Feb. 1, 1889
414,759	Phonogram Blanks	March 22, 1889
414,760	Phonograph	March 22, 1889
462,540	Incandescent Electric Lamps	March 22, 1889
430,278	Phonograph	April 8, 1889
438,309	Insulating Electrical Conductors	April 25, 1889
423,039	Phonograph Doll or Other Toys	June 15, 1889
426,527	Automatic Determining Device for Phonographs	June 15, 1889
430,279	Voltaic Battery	June 15, 1889
506,216	Apparatus for Making Glass	June 29, 1889
414,761	Phonogram Blanks	July 16, 1889
430,280	Magnetic Separator	July 20, 1889
437,426	Phonograph	July 20, 1889
465,972	Phonograph	Nov. 14, 1889
443,507	Phonograph	Dec. 11, 1889
513,095	Phonograph	Dec. 11, 1889

1890

434,588	Magnetic Ore Separator—Edison and W. K. L. Dickson	Jan. 16, 1890
437,427	Making Phonogram Blanks	Feb. 8, 1890
465,250	Extracting Copper Pyrites	Feb. 8, 1890
434,589	Propelling Mechanism for Electric Vehicles	Feb. 14, 1890
438,310	Lamp Base	April 25, 1890

NO.	TITLE OF PATENT	DATE EXECUTED
437,428	Propelling Device for Electric Cars	April 29, 1890
437,429	Phonogram Blank	April 29, 1890
454,941	Phonograph Recorder and Reproducer	May 6, 1890
436,127	Electric Motor	May 17, 1890
484,583	Phonograph Cutting Tool	May 24, 1890
484,584	Phonograph Reproducer	May 24, 1890
436,970	Apparatus for Transmitting Power	June 2, 1890
453,741	Phonograph	July 5, 1890
454,942	Phonograph	July 5, 1890
456,301	Phonograph Doll	July 5, 1890
484,585	Phonograph	July 5, 1890
456,302	Phonograph	Aug. 4, 1890
476,984	Expansible Pulley	Aug. 9, 1890
493,858	Transmission of Power	Aug. 9, 1890
457,343	Magnetic Belting	Sept. 6, 1890
444,530	Leading-in Wires for Incandescent Electric Lamps (reissued October 10, 1905, No. 12,393)	Sept. 12, 1890
534,209	Incandescent Electric Lamp	Sept. 13, 1890
476,985	Trolley for Electric Railways	Oct. 27, 1890
500,280	Phonograph	Oct. 27, 1890
541,923	Phonograph	Oct. 27, 1890
457,344	Smoothing Tool for Phonogram Blanks	Nov. 17, 1890
460,123	Phonogram Blank Carrier	Nov. 17, 1890
500,281	Phonograph	Nov. 17, 1890
541,924	Phonograph	Nov. 17, 1890
500,282	Phonograph	Dec. 1, 1890
575,151	Phonograph	Dec. 1, 1890
605,667	Phonograph	Dec. 1, 1890
610,706	Phonograph	Dec. 1, 1890
622,843	Phonograph	Dec. 1, 1890
609,268	Phonograph	Dec. 6, 1890
493,425	Electric Locomotive	Dec. 20, 1890
	1891	
476,992	Incandescent Electric Lamp	Jan. 20, 1891
470,926	Dynamo Electric Machine or Motor	Feb. 4, 1891
496,191	Phonograph	Feb. 4, 1891
476,986	Means for Propelling Electric Cars	Feb. 24, 1891
476,987	Electric Locomotive	Feb. 24, 1891
465,973	Armatures for Dynamos or Motors	March 4, 1891
470,927	Driving Mechanism for Cars	March 4, 1891

NO.	TITLE OF PATENT	DATE EXECUTED
465,970	Armature Connection for Motors or Generators	March 20, 1891
468,950	Commutator Brush for Electric Motors and Dynamos	March 20, 1891
475,491	Electric Locomotive	June 3, 1891
475,492	Electric Locomotive	June 3, 1891
475,493	Electric Locomotive	June 3, 1891
475,494	Electric Railway	June 3, 1891
463,251	Bricking Fine Ores	July 31, 1891
470,928	Alternating Current Generator	July 31, 1891
476,988	Lightning Arrester	July 31, 1891
476,989	Conductor for Electric Railways	July 31, 1891
476,990	Electric Meter	July 31, 1891
476,993	Electric Arc	July 31, 1891
484,183	Electrical Depositing Meter	July 31, 1891
485,840	Bricking Fine Iron Ores	July 31, 1891
493,426	Apparatus for Exhibiting Photographs of Moving Objects	July 31, 1891
509,518	Electric Railway	July 31, 1891
589,168	Kinetographic Camera (reissued September 30, 1902, numbered 12,037 and 12,038, and January 12, 1904, numbered 12,192)	July 31, 1891
470,929	Magnetic Separator	Aug. 28, 1891
471,268	Ore Conveyor and Method of Arranging Ore Thereon	Aug. 28, 1891
472,288	Dust-Proof Bearings for Shafts	Aug. 28, 1891
472,752	Dust-Proof Journal Bearings	Aug. 28, 1891
472,753	Ore-Screening Apparatus	Aug. 28, 1891
474,592	Ore-Conveying Apparatus	Aug. 28, 1891
474,593	Dust-Proof Swivel Shaft Bearing	Aug. 28, 1891
498,385	Rollers for Ore-Crushing or Other Material	Aug. 28, 1891
470,930	Dynamo Electric Machine	Oct. 8, 1891
476,532	Ore-Screening Apparatus	Oct. 8, 1891
491,992	Cut-Out for Incandescent Electric Lamps	Nov. 10, 1891
	1892	
491,993	Stop Device	April 5, 1892
564,423	Separating Ores	June 27, 1892
485,842	Magnetic Ore Separation	July 9, 1892
485,841	Mechanically Separating Ores	July 9, 1892
513,096	Method of and Apparatus for Mixing Materials	Aug. 24, 1892

APPENDIX

NO.	TITLE OF PATENT	DATE EXECUTED
	1893	
509,428	Composition Brick and Making Same...	March 15, 1893
513,097	Phonograph.....	May 22, 1893
567,187	Crushing Rolls.....	Dec. 13, 1893
602,064	Conveyor	Dec. 13, 1893
534,206	Filament for Incandescent Lamps.....	Dec. 15, 1893
	1896	
865,367	Fluorescent Electric Lamp.....	May 16, 1896
	1897	
604,740	Governor for Motors.....	Jan. 25, 1897
607,588	Phonograph.....	Jan. 25, 1897
637,327	Rolls	May 14, 1897
672,616	Breaking Rock.....	May 14, 1897
675,056	Magnetic Separator.....	May 14, 1897
676,618	Magnetic Separator.....	May 14, 1897
605,475	Drying Apparatus.....	June 10, 1897
605,668	Mixer	June 10, 1897
667,201	Flight Conveyor.....	June 10, 1897
671,314	Lubricating Journal Bearings.....	June 10, 1897
671,315	Conveyor	June 10, 1897
675,057	Screening Pulverized Material.....	June 10, 1897
	1898	
713,209	Duplicating Phonograms.....	Feb. 21, 1898
703,774	Reproducer for Phonographs.....	March 21, 1898
626,460	Filament for Incandescent Lamps and Manufacturing Same.....	March 29, 1898
648,933	Dryer	April 11, 1898
661,238	Machine for Forming Pulverized Material in Briquettes.....	April 11, 1898
674,057	Crushing Rolls.....	April 11, 1898
703,562	Apparatus for Bricking Pulverized Material	April 11, 1898
704,010	Apparatus for Concentrating Magnetic Iron Ores.....	April 11, 1898
659,389	Electric Meter.....	Sept. 19, 1898
	1899	
648,934	Screening or Sizing Very Fine Materials.	Feb. 6, 1899
663,015	Electric Meter.....	Feb. 6, 1899
688,610	Phonographic Recording Apparatus...	Feb. 10, 1899

NO.	TITLE OF PATENT	DATE EXECUTED
643,764	Reheating Compressed Air for Industrial Purposes	Feb. 24, 1899
660,293	Electric Meter	March 23, 1899
641,281	Expanding Pulley—Edison and Johnson	March 28, 1899
727,116	Grinding Rolls	June 15, 1899
652,457	Phonograph (reissued September 25, 1900, numbered 11,857)	Sept. 12, 1899
648,935	Apparatus for Duplicating Phonograph Records	Oct. 27, 1899
685,911	Apparatus for Reheating Compressed Air for Industrial Purposes	Nov. 24, 1899
657,922	Apparatus for Reheating Compressed Air for Industrial Purposes	Dec. 9, 1899
	1900	
676,840	Magnetic Separating Apparatus	Jan. 3, 1900
660,845	Apparatus for Sampling, Averaging, Mixing, and Storing Materials in Bulk	Jan. 9, 1900
662,063	Process of Sampling, Averaging, Mixing, and Storing Materials in Bulk	Jan. 9, 1900
679,500	Apparatus for Screening Fine Materials	Jan. 24, 1900
671,316	Apparatus for Screening Fine Materials	Feb. 23, 1900
671,317	Apparatus for Screening Fine Materials	March 28, 1900
759,356	Burning Portland Cement Clinker, etc.	April 10, 1900
759,357	Apparatus for Burning Portland Cement Clinker, etc.	April 16, 1900
655,480	Phonographic Reproducing Device	April 30, 1900
657,527	Making Metallic Phonograph Records	April 30, 1900
667,202	Duplicating Phonograph Records	April 30, 1900
667,662	Duplicating Phonograph Records	April 30, 1900
713,863	Coating Phonograph Records	May 15, 1900
676,841	Magnetic Separating Apparatus	June 11, 1900
759,358	Magnetic Separating Apparatus	June 11, 1900
680,520	Phonograph Records	July 23, 1900
672,617	Apparatus for Breaking Rock	Aug. 1, 1900
676,225	Phonographic Recording Apparatus	Aug. 10, 1900
703,051	Electric Meter	Sept. 28, 1900
684,204	Reversible Galvanic Battery	Oct. 15, 1900
871,214	Reversible Galvanic Battery	Oct. 15, 1900
704,303	Reversible Galvanic Battery	Dec. 22, 1900
	1901	
700,136	Reversible Galvanic Battery	Feb. 18, 1901
700,137	Reversible Galvanic Battery	Feb. 23, 1901

APPENDIX

NO.	TITLE OF PATENT	DATE EXECUTED
704,304	Reversible Galvanic Battery	Feb. 23, 1901
704,305	Reversible Galvanic Battery	May 10, 1901
678,722	Reversible Galvanic Battery	June 17, 1901
684,205	Reversible Galvanic Battery	June 17, 1901
692,507	Reversible Galvanic Battery	June 17, 1901
701,804	Reversible Galvanic Battery	June 17, 1901
704,306	Reversible Galvanic Battery	June 17, 1901
705,829	Reproducer for Sound Records	Oct. 24, 1901
831,606	Sound Recording Apparatus	Oct. 24, 1901
827,089	Calcining Furnaces	Dec. 24, 1901
	1902	
734,522	Process of Nickel-Plating	Feb. 11, 1902
727,117	Reversible Galvanic Battery	Sept. 29, 1902
727,118	Manufacturing Electrolytically Active Finely Divided Iron	Oct. 13, 1902
721,682	Reversible Galvanic Battery	Nov. 13, 1902
721,870	Funnel for Filling Storage Battery Jars	Nov. 13, 1902
723,449	Electrode for Storage Batteries	Nov. 13, 1902
723,450	Reversible Galvanic Battery	Nov. 13, 1902
754,755	Compressing Dies	Nov. 13, 1902
754,858	Storage Battery Tray	Nov. 13, 1902
754,859	Reversible Galvanic Battery	Nov. 13, 1902
764,183	Separating Mechanically Entrained Globules from Gases	Nov. 13, 1902
802,631	Apparatus for Burning Portland Cement Clinker	Nov. 13, 1902
852,424	Secondary Batteries	Nov. 13, 1902
722,502	Handling Cable Drawn Cars on Inclines	Dec. 18, 1902
724,089	Operating Motors in Dust Laden Atmospheres	Dec. 18, 1902
750,102	Electrical Automobile	Dec. 18, 1902
758,432	Stock House Conveyor	Dec. 18, 1902
873,219	Feed Regulators for Grinding Machines	Dec. 18, 1902
832,046	Automatic Weighing and Mixing Apparatus	Dec. 18, 1902
	1903	
772,647	Photographic Film for Moving Picture Machine	Jan. 13, 1903
841,677	Apparatus for Separating and Grinding Fine Materials	Jan. 22, 1903
790,351	Duplicating Phonograph Records	Jan. 30, 1903
831,269	Storage Battery Electrode Plate	Jan. 30, 1903

NO.	TITLE OF PATENT	DATE EXECUTED
775,965	Dry Separator	April 27, 1903
754,756	Process of Treating Ores from Magnetic Gangue	May 25, 1903
775,600	Rotary Cement Kilns	July 20, 1903
767,216	Apparatus for Vacuously Depositing Metals	July 30, 1903
796,629	Lamp Guard	July 30, 1903
772,648	Vehicle Wheel	Aug. 25, 1903
850,912	Making Articles by Electro-Plating	Oct. 3, 1903
857,041	Can or Receptacle for Storage Batteries	Oct. 3, 1903
766,815	Primary Battery	Nov. 16, 1903
943,664	Sound Recording Apparatus	Nov. 16, 1903
873,220	Reversible Galvanic Battery	Nov. 20, 1903
898,633	Filling Apparatus for Storage Battery Jars	Dec. 8, 1903
	1904	
767,554	Rendering Storage Battery Gases Non-Explosive	June 8, 1904
861,241	Portland Cement and Manufacturing Same	June 20, 1904
800,800	Phonograph Records and Making Same	June 24, 1904
821,622	Cleaning Metallic Surfaces	June 24, 1904
879,612	Alkaline Storage Batteries	June 24, 1904
880,484	Process of Producing Very Thin Sheet Metal	June 24, 1904
827,297	Alkaline Batteries	July 12, 1904
797,845	Sheet Metal for Perforated Pockets of Storage Batteries	July 12, 1904
847,746	Electrical Welding Apparatus	July 12, 1904
821,032	Storage Battery	Aug. 10, 1904
861,242	Can or Receptacle for Storage Battery	Aug. 10, 1904
970,615	Methods and Apparatus for Making Sound Records	Aug. 23, 1904
817,162	Treating Alkaline Storage Batteries	Sept. 26, 1904
948,542	Method of Treating Cans of Alkaline Storage Batteries	Sept. 28, 1904
813,490	Cement Kiln	Oct. 29, 1904
821,625	Treating Alkaline Storage Batteries	Oct. 29, 1904
821,623	Storage Battery Filling Apparatus	Nov. 1, 1904
821,624	Gas Separator for Storage Battery	Oct. 29, 1904
	1905	
879,859	Apparatus for Producing Very Thin Sheet Metal	Feb. 16, 1905

APPENDIX

NO.	TITLE OF PATENT	DATE EXECUTED
804,799	Apparatus for Perforating Sheet Metal.	March 17, 1905
870,024	Apparatus for Producing Perforated Strips	March 23, 1905
882,144	Secondary Battery Electrodes	March 29, 1905
821,626	Process of Making Metallic Films or Flakes	March 29, 1905
821,627	Making Metallic Flakes or Scales	March 29, 1905
827,717	Making Composite Metal	March 29, 1905
839,371	Coating Active Material with Flake-like Conducting Material	March 29, 1905
854,200	Making Storage Battery Electrodes	March 29, 1905
857,929	Storage Battery Electrodes	March 29, 1905
860,195	Storage Battery Electrodes	April 26, 1905
862,145	Process of Making Seamless Tubular Pockets or Receptacles for Storage Battery Electrodes	April 26, 1905
839,372	Phonograph Records or Blanks	April 28, 1905
813,491	Pocket Filling Machine	May 15, 1905
821,628	Making Conducting Films	May 20, 1905
943,663	Horns for Talking Machines	May 20, 1905
950,226	Phonograph Recording Apparatus	May 20, 1905
785,297	Gas Separator for Storage Batteries	July 18, 1905
950,227	Apparatus for Making Metallic Films or Flakes	Oct. 10, 1905
936,433	Tube Filling and Tamping Machine	Oct. 12, 1905
967,178	Tube Forming Machines—Edison and John F. Ott	Oct. 16, 1905
880,978	Electrode Elements for Storage Batteries	Oct. 31, 1905
880,979	Method of Making Storage Battery Electrodes	Oct. 31, 1905
850,913	Secondary Batteries	Dec. 6, 1905
914,342	Storage Battery	Dec. 6, 1905

1906

858,862	Primary and Secondary Batteries	Jan. 9, 1906
850,881	Composite Metal	Jan. 19, 1906
964,096	Processes of Electro-Plating	Feb. 24, 1906
914,372	Making Thin Metallic Flakes	July 13, 1906
962,822	Crushing Rolls	Sept. 4, 1906
923,633	Shaft Coupling	Sept. 11, 1906
962,823	Crushing Rolls	Sept. 11, 1906
930,946	Apparatus for Burning Portland Cement	Oct. 22, 1906
898,404	Making Articles by Electro-Plating	Nov. 2, 1906

NO.	TITLE OF PATENT	DATE EXECUTED
930,948	Apparatus for Burning Portland Cement	Nov. 16, 1906
930,949	Apparatus for Burning Portland Cement	Nov. 16, 1906
890,625	Apparatus for Grinding Coal	Nov. 23, 1906
948,558	Storage Battery Electrodes	Nov. 28, 1906
964,221	Sound Records	Dec. 28, 1906
	1907	
865,688	Making Metallic Films or Flakes	Jan. 11, 1907
936,267	Feed Mechanism for Phonographs and Other Machines	Jan. 11, 1907
936,525	Making Metallic Films or Flakes	Jan. 17, 1907
865,687	Making Nickel Films	Jan. 18, 1907
939,817	Cement Kiln	Feb. 8, 1907
855,562	Diaphragm for Talking Machines	Feb. 23, 1907
939,992	Phonographic Recording and Reproducing Machine	Feb. 25, 1907
941,630	Process and Apparatus for Artificially Aging or Seasoning Portland Cement.	Feb. 25, 1907
876,445	Electrolyte for Alkaline Storage Batteries	May 8, 1907
914,343	Making Storage Battery Electrodes	May 15, 1907
861,819	Discharging Apparatus for Belt Conveyors	June 11, 1907
954,789	Sprocket Chain Drives	June 11, 1907
909,877	Telegraphy	June 18, 1907
	1908	
896,811	Metallic Film for Use with Storage Batteries and Process	Feb. 4, 1908
940,635	Electrode Element for Storage Batteries	Feb. 4, 1908
909,167	Water-Proofing Paint for Portland Cement Buildings	Feb. 4, 1908
896,812	Storage Batteries	March 13, 1908
944,481	Processes and Apparatus for Artificially Aging or Seasoning Portland Cement.	March 13, 1908
947,806	Automobiles	March 13, 1908
909,168	Water-Proofing Fibres and Fabrics	May 27, 1908
909,169	Water-Proofing Paint for Portland Cement Structures	May 27, 1908
970,616	Flying Machines	Aug. 20, 1908
	1909	
930,947	Gas Purifier	Feb. 15, 1909
40,527	Design Patent for Phonograph Cabinet.	Sept. 13, 1909

FOREIGN PATENTS

In addition to the United States patents issued to Edison, as above enumerated, there have been granted to him (up to October, 1910) by foreign governments 1239 patents, as follows:

Argentine	1
Australia	6
Austria	101
Belgium	88
Brazil	1
Canada	129
Cape of Good Hope	5
Ceylon	4
Cuba	12
Denmark	9
France	111
Germany	130
Great Britain	131
Hungary	30
India	44
Italy	83
Japan	5
Mexico	14
Natal	5
New South Wales	38
New Zealand	31
Norway	16
Orange Free State	2
Portugal	10
Queensland	29
Russia	17
South African Republic	4
South Australia	1
Spain	54
Sweden	61
Switzerland	13
Tasmania	8
Victoria	42
West Australia	4
Total of Edison's Foreign Patents	1239

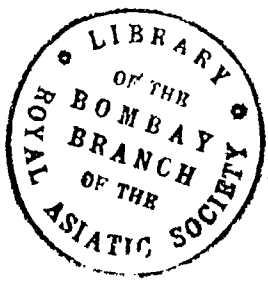
LIBRARY
OF THE
BOMBAY
BRANCH
OF THE
ROYAL ASIATIC SOCIETY

INDEX

A

Acheson, E. G., 275, 284, 328.
Adams, M. F., 62, 63, 68, 70, 94, 95, 98, 107, 111.
Adrian, Michigan, Edison's experiences as telegraph operator at, 65.
Aerophone, invented by Edison, 225.
Aeroplanes, Edison's experiments with, 585.
Allgemeine Elektricitaets Gesellschaft, 318, 445, 662.
Alternating current *versus* direct current and Edison's attitude, 418–421.
Alva, Duke of, 21.
American Speaking Telephone Co., 195.
Anders, George, 102.
Andrews, E. W., 161.
Andrews, W. S., 275, 426, 434.
Ansonia Brass and Copper Co., 665.
Appleton, Wisconsin, first Edison commercial central station at, 417.
Arc lighting, Davy and the voltaic arc, 236; improvements, 1850–1858, 237; at Centennial Exposition in 1876, 237; foundations laid by Brush and Weston, 237; Edison's experiments, his anticipation of "flaming arcs" in 1875, 237; Wallace's experiments and Edison's visit to Ansonia, Connecticut, in 1878, 246–249.
Arc-lighting interests, opposition of, to the incandescent light, 349–352.
Arctic expedition, De Long, Edison's part in the fitting out of, 284, 285.
Ashley, J. N., 128.
Athens, Greece, first European Edison station on three-wire system, 283.
Atlantic & Pacific Telegraph Co., 157–162.
Automatic Telegraph Co., 139, 157.
Automatic telegraphy, *see* Telegraphy.

B

Bailey, Tannie Edison (sister), 15.
Bain's system of automatic telegraphy, 142.
Bamboo and other natural fibres as lamp-filament material, a world-hunt for by Edison's agents: Moore sent to China and Japan in 1880, 300; Brauner to Brazil in 1880, 301; searches in Cuba, Jamaica and Florida, 302, 303; McGowan and Hanington sent to South America in 1887, 303–306; Ricalton to India and Japan, 307–314.
Barker, G. F., 226, 282.
Batchelor, Charles, 276, 328, 334, 335.
Bates, D. H., 60.
Bates Manufacturing Co., 693.
Bates numbering machine, 680.

Battery enterprises at Silver Lake, 678, 697.
Beach, R. H., 554, 570.
Bell, Alexander Graham, his first magneto telephones, 173; his patent of 1876, 174, 177; Edison gives him credit for invention, 176, 179; patent litigation, 174, 178; his prophecy concerning the use of the telephone, 194; as manufacturer, 102; Fritz gold medal awarded to, 346.
Bennett, James Gordon, 372,446.
Bergmann, 137, 272, 282, 359, 754.
Berlin Edison Co., 283, 445.
Berliner patent of Bell telephone system, 177.
Bernhardt, Sarah, her visit at Menlo Park, 284, 743.
Black Friday, the panic of, in New York, 1869, 124–127.
Blind people, Edison's tests to discover writing-fluid that could be used by, 232.
Boehm, L. K., 273.
Borst, Jerry, 127.
Boston, Edison's work and inventions in, 98–113.
Bouliguine, 240.
Bourseul, Charles, his ideas on the electrical transmission of sound, 171.
Bradley, Alva, Edison named after, 21.
Bradley, Doctor, first to make electrical measurements of precision with galvanometer, 129.
Braking, electric system, Menlo Park railway experiments in 1880, 457.
Brauner, J. C., his search in Brazil for natural fibres for lamp filaments, 302.
Brockton, Massachusetts, one of the first central stations on the three-wire system, 425, 439, 440, 442.
Bronx Park studio for taking motion pictures, 544.
Brown, W. C., 60.
Bulletin of the Edison Electric Light Co., 375–377.
Bullock, Rufus, 60.
Burry, John, 136.

C

Callahan, E. A., 120–122, 136, 161, 162.
Camera, Edison, for motion pictures, 541, 903.
Carbon pressure relay, Edison's development of, 200.
Carbon transmitter, Edison's development of, 177, 179, 180, 199, 839.
Carleton, Guy, 61.
Carnegie, Andrew, 8, 60.
Caveat, list of matters covered by one of Edison's, 591.
Cement-grinding, proper degree of fineness, 516, 517.
Cement house, Edison's, 519; general scheme of, 521; details of, 937; pouring of the cement, 520, 522; cost of iron molds and plant, 252; plan of house, 523, 524; cost of house, 524; the benefit to the wage-earner, 525, 526.
Cement industry, commercial value of, 699.
Cement kilns, long, Edison's, 511–514, 921.
Cement-mixing, Edison's accurate methods, 515.
Cement plant, Edison Portland, the fifth largest producer in the United States, 507; plan of proposed works drawn within twenty-four hours, 508, 510; automatic lubricating system, 509; the giant crushing-rolls, 511; the invention of the long kiln, 511–515; accuracy of mixing and the fineness of grinding, 515–517.
Central-station business, influence of Edison on, 686.
Central-station companies, Edi-

son's ideas about licensing, 371.
Central station, first Edison, Pearl Street, New York, establishment of, 384–416; ascertaining precise conditions of district, 385; calculation of conductors for distribution of current, 386; Edison's invention of the "feeder and main" system, litigation, 386–388, 878; his insistence on underground wires, 388–393; planning of the station, 394–396; Porter invited to construct steam-engines, 397; laying of the underground conductors, 398–401; dynamo installation, 401; test of plant, 402; official starting of plant, September 4, 1882, 403; first experience in parallel operation of dynamos, 403–405; rapid growth of output, 407; first charges for service, December, 1882, 409; disastrous fire in 1890, 414; sale of building in 1895, 415.
Central stations, Edison system, in Europe, 283, 284; first European station on the three-wire system at Athens, Greece, 283; station at Holborn Viaduct, London, 336–338, 401, 406, 417; demonstration of system in Paris, 325–328, 334, 335, 394, 445; first commercial station at Appleton, Wisconsin, 417; first three-wire stations at Brockton, Massachusetts, 425, 438–440, 442, 886; and at Sunbury, Pennsylvania, 425–429, 434; installations at Lawrence and Fall River, Massachusetts, and at Louisville, Kentucky, Exposition of 1883, 442; at Santiago, Chile, 444.
Chalk battery, Edison's, 201.
Chalk device for telegraph instrument, made by Edison for Orton and the Western Union, 183.
Chalk telephone receiver invented by Edison, 184.
Chamberlain, Joseph, 744.
Chandler, A. B., 60.
Cheever, C. A., 212.
Chemistry, Edison's interest in, 27; his "laboratory" at home 27, 28, 38; on the train, 32, 37; his continued interest, 104.
Childs, George W., 744.
Church, the first to be lighted by incandescent lamps, 336.
Cincinnati, Ohio, Edison's experiences as telegraph operator at, 67–73.
Clarke, C. L., 274, 375.
Claudius, Herman, 275.
Clowry, Robert C., 60.
Concentration of iron ore, Edison's early experiments at Quogue, Long Island, 474; his patents in 1880, 476; basic principle of his method, 477; machinery and processes devised, 477, 478; invention of magnetic needle for indicating deposits of ore, 479; magnetic survey by Edison from Lower Canada to North Carolina, 480; design of machinery for crushing and separation of ores, 482–493; the giant rolls, 482, 484; the intermediate rolls, 485; the dryer, 486; the three-high rolls, 487; the safety device, 488; the tower screen, 489; diagram of the process, 490; preparation of concentrates for market, 491–493; briquetting machinery, 493; test of briquettes at the Crane furnace, 494, 498; the hoisting crane, 496; the conveyor belts, 496; various details, 909; discovery of Bessemer ore in the Mesaba range causes abandonment of plant at Edison, New Jersey, 499, 502–504.
Conveyor belts, devised by Edison, 496.

Copper production, increase of, Edison's influence on, 684.
Cornell, Ezra, 8, 60.
Craig, D. N., 145.
Crane, Edison's large hoisting, at concentration works, 496.
Crane furnace tests of Edison's ore briquettes, 494, 498.
Crushing machinery devised for Edison's magnetic ore milling work, 482–489.

D

Daft friction gear, 455.
Davenport, Thomas, his electric railway experiments in 1834, 451.
Davidson, Robert, his electric railway experiments in 1840, 451.
Davy and the voltaic arc, 6, 7, 236.
Delany, P. B., 146.
De Long, G. W., Lieut., Edison's part in the fitting out of the *Jeannette*, 284, 285.
De Souchet, Harry, 61.
Dick, A. B., 698.
Direct current *versus* alternating current and Edison's attitude, 418–421.
District messenger system invented by Edison, 160.
Domestic Telegraph Co., 160.
Dryer, tower, in Edison's ore-concentration works, 486.
Ducos, his patent covering the reproduction of animate movement, 532, 540.
Dumont, experimenter with motion pictures, 540.
Duplex telegraphy, *see* Telegraphy.
Dynamo, Edison's early work, 291–298, 325; his hand-power machine for China, 359; beginning of manufacture, 359; dynamo for the Paris Exposition of 1881, 325, 394; for London, 336–338, 401, 406, 417; in New York, 403; for Milan, 406; first experience in parallel operation in Pearl Street station, 403–405; details of development, 864.
Dynamo, the Wallace-Farmer, 247.

E

Eastman Kodak Co., 539.
Eaton, S. B., 365, 413, 717, 735.
Eckert, T. T., 60, 159, 165, 166.
Edgar, C. L., 433.
Edison family, beginning of, in Holland, 9; pronunciation of name, 9; in New Jersey, 9; in Nova Scotia, 10; in Ontario, 10, 12, 15; at Milan, Ohio, 14; at Port Huron, Michigan, 23; at Gratiot, Michigan, 23; social standing, 23; financial conditions, 24.
Edison, Charles (nephew), his brilliancy, his untimely death, 193.
Edison, John (grandfather), 10, 11.
Edison, Nancy Elliott (mother), birth, 14; teacher, 11, 14; marriage, 11; children, 15; instruction of Edison, 25, 26; her bravery and her wisdom, 629; her invalidism and death, 23.
Edison, S. O. (uncle), his inventions, 20.
Edison, Samuel (father), birth, 10; his appearance and character, 11; in Canada, 10, 11; marriage to Nancy Elliott, 11; flight to the United States, 12; home and life at Milan, Ohio, 12–14; at Port Huron and Gratiot, Michigan, 23–25; his responsibility for son's education, 25; his visits at Menlo Park, 286; his physical strength, 758.
Edison, Thomas (great-grandfather), 10.
Edison, Thomas Alva:
Ability to detect errors, 622, 623.

Edison, Thomas Alva: *Continued.*
Accuracy of his "guesses," 297, 620.
Ancestors, his Dutch descent, 9, 473.
Automobiles, his interest in, 766.
Awards, decorations, and medals, 45, 334, 346, 742, 743, 747, 770, 771.
Birth, at Milan, Ohio, 1847, 9; house in which he was born, 20.
Boyhood at Port Huron, Michigan, 20, 23–47.
Brevity of his speech, 308, 314.
Brother and sisters, 15.
Characteristics of his personality, 774–783.
Chemistry, his interest in, 27, 28, 32, 37, 38, 104.
Childhood and youth, 16–19; constructive tendencies, 17; the nest of eggs, 17; narrow escapes, 18, 19.
Children, 769.
Clothes, simplicity of, 765, 773.
"Commanding, towering figure in the pages of history," 683.
Dangers escaped in experimentation, 759.
Deafness, cause of, 37; advantages of, 38.
"Debt of the Age" to, 681–705.
"Doctrine of evolution incarnate," 631.
European trip in 1889, 746.
Experimenter-inventor, 507.
Eyesight, his unusual, 762.
"Franklin of the Nineteenth Century," 3.
"Greatest living American," popular vote, 574.
Home life at Glenmont, New Jersey, 769, 772.
Hours of work, daily, 763.
Intuitive power and gift of prophecy, 512, 621–623, 627, 628.
Edison, Thomas Alva: *Continued.*
Inventing, his method of, 596–628.
Invention, his first, a vote-recorder, 102.
Journalistic enterprises, 666.
Manufacturer, the various industries at Orange, 660–681, 693.
Marriages, 268, 769.
"Master Impresario" of his age, 528.
Memory, noteworthy instance, of, 518.
Methods of work and business methods, 278, 299, 368–370, 400.
Name, pronunciation of, 9.
Named Alva after Captain Alva Bradley, 21.
Newsboy, experiences as, 29–47.
Optimism, 555, 560.
Patent rights and the difficulty of maintaining them, 706–740.
Personal appearance and physical vigor, 281, 330–332, 762, 763, 773.
Philosopher or "pure scientist," he never assumed to be, 239.
Rawlins, Wyoming, trip to, to witness eclipse of sun, 1878, 226–231.
Reading line of print at once, faculty of, 64.
Relations with his associates, 273, 274, 324, 360, 362, 558.
Secret of achievement, "hard work, based on hard thinking," 554, 609.
Social side of his nature, 741–783.
Studious habits, his fund of miscellaneous information, 90.
Telegraph operator, his experiences as, 50–113.
Value of his inventions to the world, 682–705.

Edison, Thomas Alva: *Continued.*
"Versatile and many-sided nature, fertility of imagination and wealth of ideas," 527, 573, 574, 595.
"Victor Hugo Edison," a nickname, 26.
Visits and letters from distinguished people, 283, 284, 657–659, 743, 745.
See also Concentration of iron ore; Incandescent lamp; and other special headings.
Edison, William Pitt (brother), 15.
Edison Business Phonograph Co., 693.
Edison Company for Isolated Lighting, 372.
"Edison effect" in incandescent lamps, 581.
Edison Electric Illuminating Co., organization of, 393.
Edison Electric Light Co., 329, 356, 372; bulletin issued by, 375–377; office at 65 Fifth Avenue, 359–363, 365, 374; shops on Goerck Street, 380; transfer of plant to Schenectady, New York, 381; sale of works, 382, 383.
Edison General Electric Co., 382, 383, 467, 754.
Edison Machine Works, 332.
Edison Manufacturing Co., 693.
Edison Phonograph Works, 222. 693.
Edison Storage Battery Co., 693.
Edward, King, his visit to Canada as Prince of Wales, 44; his letter to Edison accompanying the Albert medal, 45.
Electric light, *see* Incandescent lamp; Lighting system.
Electric railway, *see* Railway.
Electric Railway Company of America, 465–468.
Electric Tube Co., 370, 398.
Electrical Exposition in 1881, the first ever held, 325.
Electrical parlance, words and phrases in, many owe their origin to Edison, 575.
Electrical World, 666.
Electricity direct from coal, Edison's experiments, 588.
Electromotograph, 182, 183, 833.
Elliott, Ebenezer, 14.
Elliott, John (grandfather), 14.
Ellsworth, George, telegrapher for the Confederate guerrilla Morgan, 69, 93.
Elverson, W. J., 61.
Engineers, electrical, first "professional card" issued by, in America, 128.
Engineers' Club of Philadelphia, Edison's application for membership in, 660.
Engines, *see* Steam-engines.
England, Edison's automatic telegraph system in, 148–152; telephone development and Edison's competition with the Bell Co., 183–185; Edison's lighting system in London, 336–338, 401, 406, 417.
"Etheric force," Edison's experiments on, in 1875, 578; Hertz's "electromagnetic waves," 579; details of experiments, 819.

F

Faber's talking-machine, 204.
Factory, the first to be lighted by electricity, 446.
Fall River, Massachusetts, early central station at, 442.
Faraday, his work in induction, 7; Edison calls him the Master Experimenter, 101.
Farmer, Moses G., 154, 248.
Faure's storage battery, 551.
Faust and Edison, the extremes of philosophic thought, 27.
Feeder and main system, Edison's invention of, and litigation, 386–388; patents, 340–345, 878.
Ferguson, L. A., 138.

Field and Edison, railway-patent litigation, 467.
Field, Stephen D., 136; his railway work, 452, 465.
Filament material, search for, *see* Bamboo.
Filament patent suit against the United States Electric Lighting Co., 721.
Film, the kodak, development of, 539.
Fire-alarm telegraph systems, 102.
Fire-engine house, first to be supplied with current from central station, 440.
Fire question in the early days and the formulation of insurance rules for electric wiring, 377, 378.
Florida, Edison's winter home in, 656, 770.
Fluoroscope, first made by Edison, 581.
Fodor, Etienne, 283.
Force, Martin, 273, 274.
Franklin of the Nineteenth Century, Edison referred to as, 3.
French Edison Co., 274, 283, 335.
Fritz gold medal awards, 346, 396.
Fritz, John, 495.

G

Gas lighting, early practice, 1804–1816, 235; Edison's investigation of "gas-jet distribution," 247, 263–266.
Gas-lighting company first organized in 1804, 235.
Gas-lighting industry, effect of the incandescent light on, 352–354.
Gautherot, discovered the principle of the storage battery, 551.
General Electric Co., 383, 690.
Generator, *see* Dynamo.
Genius, Edison's definition of, 607.
Gilbert, William, the father of modern electricity, 588.
Gilliland, Ezra T., 577.
Glen Ridge, New Jersey, manufacture of Edison's storage battery at, 565.
Goebel claims for invention of electric-light filament, 716, 725–733.
Gold & Stock Telegraph Co., 110, 122, 124, 129, 131, 195.
Gold extraction, Edison's experiments in, 583, 584.
Gold indicator devised by S. S. Laws, 118.
Gold Indicator Co., 122, 124.
Gold panic, Black Friday, New York, 1869, 124–127.
Gold reporting telegraph, 119.
Gold-room in Wall Street, 117.
Gould, Jay, his attempt to corner the gold market in 1869, 124; his appreciation of Edison's telegraph systems, 147, 157–160, 163–166.
Gouraud, G. E., 149, 152, 183–185, 192.
Grand Trunk Railroad, Edison as telegraph operator for, 52.
Gray, Elisha, his telephone, and other inventions, 174, 175.
Greeley, Horace, 128.
Green, George F., 452.
Green, Norvin, 138, 365.
Griffin, S. L., 270.

H

Haid, Dr. A., 271, 275.
Hamblet, introduced Western Union Telegraph system of time distribution, 112.
Hammer, W. J., 224, 273, 336, 417.
Hanington, C. F., his search in South America for filament material, 303.
Harrington, George, 145, 148.
"Hello," the term was first used in Edison's laboratory, 575.
Helmholtz, Edison's visit to, 750.

Henry, Joseph, 118, 173.
Herrick, 275.
Herter, Christian, 373.
Hertzian waves and Edison's "etheric force," 579.
Hess, Jacob, 392.
Higgs, Paget, on the electric light, 1879, 242.
Hipple, James, 274.
Holzer, William, 274.
Hopkinson and Kapp, 293, 294.
Hotel, the first, to be lighted by Edison plant, 446.
House, cement, *see* Cement house.
Houston, Sam, anecdote concerning, 46.
Hughes, C. T., 274, 454, 463, 472.
Hughitt, Marvin, 60.

I

Incandescent lamp, invention of, "state of the art" prior to 1879, 236–243, 248; Edison's experiments with carbon and various refractory metals in 1877, 244–246; his experiments in 1878–79, 249–263, 289, 290; his discovery that the filament of carbon met all requirements, October, 1879, 258; his first experiment with bamboo for filaments, 262; Edison's associates in perfecting the electric light, 273; a world-hunt for natural fibre filament material, 299–317; Moore sent to China and Japan in 1880, 300; Brauner to Brazil in 1880, 301; search in Cuba, Jamaica, and Florida, 302, 303; McGowan and Hanington sent to South America in 1887, 303–306; Ricalton sent to India and Japan, 307–314; the giant bamboo of Ceylon and Burmah found by Ricalton, 311, 313; production of an artificial carbon which took the place of fibre material, 314, 315; substitution of metallic filaments for those of carbon, 316; manufacture of lamps at Menlo Park and at Harrison, 356–358; patent litigation, 715–733; details of lamp, 857. *See also* Lighting system.
Indianapolis, Edison's experiences as telegraph operator at, 66.
Industries in the United States directly founded upon or affected by Edison's inventions, statistical résumé, 703.
Insulating joint invented by Luther Stieringer, 438.
Insull, Samuel, 192, 274, 278, 328–333, 368, 382, 428, 461.
Insurance rules for electric wiring, early, 377, 378.
International Exposition at St. Louis, 1904, Edison as honorary electrician, 65.
Inventing, Edison's method in, 596–628; his exactitude, 599; his originality and fertility of resource, 601, 624; the laboratory note-books, 602, 618; his definition of genius, 607; his empirical methods, 608, 618; his patience, 612; his monetary views, 616, 617; his intuitive power, 620, 621; his ability to detect errors, 512, 622, 623; his gift of prophecy, 621, 627, 628.
Invention, instance of contemporaneous, 708.
Inventions, Edison's miscellaneous, 573–595; classification of his inventions, 574; his "hundreds of dormant inventions," 575; value of his inventions to the world, 682–705; his experiences with the Patent Office, 188; number of his patents, 140, 339–345, 591; list of his patents, 943–971; patent rights and the difficulties that beset inventors, 706–740.

Inventive progress of the first half of the nineteenth century, 3.
Inventors, attitude of the courts toward, in America and England, 185–190; the difficulty of securing and maintaining patent rights, 706–740.
Iron ore, Eastern and Western competition in the early 80's, 475; discovery of Bessemer ore in Mesaba range, 499. *See also* Concentration of iron ore.
Isolated plants, early demand for, 371–374.
Italian Edison Co., 283, 443.

J

Jehl, Francis, 273, 274, 277, 279, 289, 292, 294, 297.
Jenks, W. J., 432, 441, 735.
Jewell, Marshall, 60.
Johnson, E. H., 142, 147, 193, 273, 282, 329, 331, 334–338, 374, 417, 756.
Johnston, W. J., 666.

K

Kelvin, Lord, 54, 552, 580, 743; his appreciation of Edison's inventions, 167, 384; awarded the Fritz gold medal, 346.
Kennan, George, 61.
Kennelly, A. E., 138.
Khotinsky, 240.
Kilns, *see* Cement kilns.
Kinetograph and projecting kinetoscope, 903.
Kinetoscope, 541.
Knudson, A. A., 136.
Kodak film, development of, 539.
Konn, 240.
Kosloff, 240.
Kruesi, John, 137, 208, 271, 273, 276, 359, 370, 398, 464, 638.

L

Laboratory of Edison's boyhood days, at home, 27, 28, 38, 629, on the train, 32, 37.
Laboratory in Florida, 656.
Laboratory at Menlo Park, description of, and of shops, 269–272; centre of Edison's business life, 278; methods of work at, 279, 324; visitors from foreign countries, 283, 284; visit of New York Board of Aldermen to see lighting system, 286; first actual central station at Menlo Park, 333; disintegration of laboratory force, 327; memories of Menlo Park, 267–298; anecdotes, 632–638.
Laboratory at Llewellyn Park, Orange, 271; removal from Menlo Park, 638; plan of laboratory, 639; the library, 640; the stock-room, 645; machine shops, 647, 648; Edison's favorite rooms, 649, 654; various small buildings, 652–655; manufacturing industries at Orange, 660–681, 693; number of employees, 702.
Lamont, Daniel, 60.
Lawrence, Massachusetts, early central station at, 442.
Laws, S. S., devised the "gold indicator," 118, 130.
Lawson, J. W., 273.
Lefferts, Marshall, 131–134, 448, 449.
Leonard, H. Ward, 440.
Library at Orange laboratory, 640.
Lieb, J. W., Jr., 138, 283.
Lighting industry, electric, Edison's influence on the growth of, 685.
Lighting system, early work of its development, 291–298; Edison's work regarding magnetism, 293, 294; the development of the dynamo, 292–296; inventing a complete system of lighting, 318–383; Rathenau's appreciation of Edison's work, 318; leading items needed for perfect illumina-

tion by electricity, 321; co-operation between Edison and his associates, 324, 325; system installed at Menlo Park, 333; Edison's patents for a "System of Electrical Distribution," 339–345; system demonstrated at Paris in 1881, 325–328, 334, 335, 394, 445; in London, at Holborn Viaduct, in 1882, 336–338, 401, 406, 417; Edison's faith in its success, 349; opposition of the arc-lighting interests, 349–352; of the gas industry, 352; other difficulties, 354–356; the manufacture of lamps and dynamos started, 356–359; office of the Edison Electric Light Co., at 65 Fifth Avenue, 359–365; legal assistance of Mr. Lowrey and Sir Richard Webster, 366–368; the establishment of central stations in large cities and towns, 371; demand for isolated plants, 371–375; night school at 65 Fifth Avenue, 374; Bulletin of the Edison Electric Light Co., 375–377; formulation of insurance rules to govern wiring, 377–379; the standardizing committee and its effect, 379; Edison's invention of the "feeder and main" system and litigation, 386–388, 878; first bills for lighting service in New York City, 409; invention of three-wire system, 424, 425, 886; patent litigation, 715–733.

Little, George, 141, 142, 148.

Llewellyn Park, Edison's home at Glenmont, 769. *See also* Laboratory at Llewellyn Park.

Locomotive, electric, used in Menlo Park experiments in 1880, 454–458, 465, 472; "The Judge," at Chicago Railway Exposition of 1883, 466.

Locomotive, steam, Edison's early experiences on, 40.

Lodge, Sir Oliver, 579, 580.

Logan, Tom, 272.

London, Edison's lighting system installed in 1882, at Holborn Viaduct, 336–338, 401, 406, 417.

Louisville, Kentucky, Edison's experience as telegraph operator at, 75–89; electric lighting at Exposition of 1883, 442.

Lowrey, G. P., his legal assistance to Edison, 365–368.

Lubricating of machinery, Edison's automatic system, 509, 510.

M

McGowan, Frank, his search for filament material in South America, 303–306.

Magnetic milling work, *see* Concentration of iron ore.

Magnetic needle for indicating deposits of magnetic iron ore, Edison's invention of, 479.

Magnetic survey from Lower Canada to North Carolina by Edison, 479, 480.

Magnetism, Edison's work and tests regarding, 293, 294.

Mallory, W. S., 116, 497, 500, 502, 504, 508, 511, 615.

Manholes, Edison's method of preventing explosions in, 586.

Manufacturing industries at Orange, New Jersey, 600–681, 693.

Marey, E. J., his work in the development of motion pictures, 535, 536, 540.

Martin, T. C., 138.

Measuring instruments devised by Edison, 589.

Medals, awards, and decorations presented to Edison, 45, 334, 346, 742, 743, 747, 770, 771.

Megaphone perfected by Edison, 224.

Memphis, Tennessee, Edison's

experiences as telegraph operator at, 74.
Menlo Park, *see* Laboratory at Menlo Park.
Mesaba iron ore discovery, effect on Edison's concentration works, 499–504.
Meter, electrolytic, Edison's invention of, 409; first uses of, 337, 409, 429, 430, 432–438; principle of, 431.
Microphone, Edison's part in the invention of, 198.
Milan, Ohio, 12–14, 19, 21; birthplace of Edison, 20.
Miller, H. F., 651.
Miller, Lewis, father of the "Chautauqua idea," 769.
Miller, Mina, Edison's second wife, 769.
Milliken, George F., 98.
Mimeograph invented by Edison, 168; commercial value, 697.
Moore, W. H., his search in China and Japan in 1880 for bamboo, 300.
Morse, S. F. B., 7, 8.
Motion pictures, 527–550, 903; history of efforts to record and reproduce animate movement prior to Edison's experiments, 529 – 535; the Phenakistoscope, the Zoetrope or Wheel of Life, 530, 531, 534; work of Plateau, 530; of Ducos, 532; of Muybridge, 533-535; of Marey, 535; first suggestion concerning use of photography made by Ducos, 532; first attempt to use photography, by Muybridge, 533–535; use of dry plates by Marey, 535; condition of the art when Edison entered the field, 536, 537; early experiments by Edison, 537–539; development of the kodak film, 539; question of high speed in taking pictures, 540; first Edison camera in 1889, 541; the kinetoscope, 541; the kinetograph and projecting kinetoscope, 903; work at the Edison laboratory, 542 – 544, 547; the Bronx Park studio, 544–546; method of taking pictures, 544–548; of securing curious effects, 548; possibilities of motion pictures along educational lines, 542, 549; Edison the Master Impresario of his age, 528; the industry at Orange, New Jersey, 674; Edison's studios in New York City, 675 – 677; commercial value, 695.
Motograph, *see* Electromotograph.
Motor, electric, Edison an early inventor, 448; history of the Payne motor, 448–450. *See also* Railway, the electric.
Mott, C. T., 274.
Mott, S. D., 274.
Multiple control of electric trains, Edison's invention, 462.
Munsey, Frank A., 61.
Music transmitted by Gray by means of his harmonic telegraph, 175.
Muybridge, Edward, his attempts to secure an illusion of motion by means of photography, 533–536, 540.

N

National Electric Light Association in 1885 represented the arc-lighting interests, 351;
National Phonograph Co., 222; 673, 693.
New York Edison Co., 415, 434.
Newspapers, *Weekly Herald*, the first paper printed on train in motion, by Edison, 33–36; change of name to *Paul Pry*, 39; Edison on the origin of the humorous paragraph and the comic column in American newspapers, 84; reports of political speeches, how they are made, 91.

Nichols, E. L., 275.
Nickel flake, manufacture of, 567, 926.
Nickelodeon, *see* Motion pictures.
North American Phonograph Co., 221, 222.
Note-books, Edison's laboratory, 602–619.
Numbering machine, Bates, 680.

O

Oates, Michael, Edison's boyhood chum, 29, 30.
Odoroscope devised by Edison, 590.
Oiling of machinery, Edison's automatic system, 509, 510.
Operator, 666.
Orange, New Jersey, manufacturing industries at, 660-681, 693. *See also* Laboratory at Llewellyn Park.
Ore milling, *see* Concentration of iron ore.
Orton and the Western Union, 179, 180, 182, 183.
Ott, John, 271, 614, 648.

P

Page, 170, 182, 452.
Palmer, W. J., 142.
Palmer and Hall, model of electric railroad line in 1852, 101.
Paraffin paper introduced by Edison, 168.
Paris, demonstration of Edison's lighting system in, 325–328, 334, 335, 394, 445.
Paris Exposition of 1889, Edison's exhibition at, 747.
Parker, Dr. Joseph, 336.
Patent litigation in America and England, difference between American and English courts, 185–190.
Patent Office, Edison's experience with, 188.
Patent rights and the difficulties that beset inventors, 706–740.
Patent rights of Edison, and the difficulty of maintaining them, 712–740; concerning the electric light, 715–737; reason for delay in litigating patents, 717; suit on the filament patent, 721–734; the Goebel claims, 716, 725–733; organization of legal departments, 735, 737; number of patents taken out by Edison, 140, 339–345, 591; list of patents, 943–971.
Paul Pry, paper published by Edison in his boyhood, 39.
Payne motor, history of the, 448–450.
Pen, the electric, 697.
Pender, Sir John, 577, 752.
Phelps, G. M., 136.
Phelps, Lucius J., 577.
Phenakistoscope, 530.
Phonograph, Edison's account of its invention, 68, 206–209; details of the invention, 848; original machine in South Kensington Museum, 209; exhibition at Washington, 210; press notices of 1878, 211, 212; apparatus exploited by the Phonograph Co., 212–214; description of original instrument, 214; Edison's ideas as to possible uses, 216; its commercial development, 218–223; its appearance in Europe, 233; the "improved" form of 1888, 668; its manufacture at Orange, New Jersey, 670–674; commercial value of the invention, 693.
Phonograph Co., 212.
Phonomotor invented by Edison, 226.
Phonoplex, 808.
Photography, instantaneous, effect of, upon development of motion pictures, 529, 531–538; the kodak film, 539; the Edison camera, 541.
Planté, his storage battery, 551.
Plateau, his optical toy, 530.

Pope, Franklin L, 121, 128, 138.
Pope, Ralph W., 130, 137.
Port Huron, Michigan, Edison's boyhood at, 20, 23–47.
Porter, C. T., award of John Fritz medal to, 396.
Porter, G. D., 84.
Preece, Sir W. H., 242, 337.
Primary battery, Edison-Lalande, 678, 697.
Printing-press, first electric power applied to, by Thomas Davenport, 451.
Pullman, George, 37.
Puskas, Theodore, first to suggest a telephone exchange, 179.
Pyromagnetic motors and generators devised by Edison, 588.

Q

Quadruplex telegraphy, *see* Telegraphy.
Quogue, L. I., Edison's experiment in magnetic separation of black sand, 474.

R

Railway, the electric, early experiments, Thomas Davenport in 1834, 451; Robert Davidson in 1839, 451; Page in 1851, Green in 1856 and 1875, 452; Siemens' road at Berlin Exhibition in 1879, 453; patents of Stephen D. Field, 452, 465; first road to collect fares, 458; influence of Edison on development of the electric railway, 688.
Railway, the electric, Edison's experimental track at Menlo Park in 1880, 450, 453–465; description of road, 454; of locomotive, 454; various details, 892; first test, 455; visitors at Menlo Park, 458–465; co-operation of Henry Villard, 459–462; Edison's scheme of a third rail and shoe, 462; his system of multiple control, 462; his sliding contact in a slot, 462; experiments on a 45 per cent. grade, 465; experimental railway exhibiting Edison and Field patents, at Chicago Railway Exposition in 1883, 465, 466; Edison's connection with the Electric Railway Co., 465–467; his street-railway system devised at the request of Henry Villard, 469–471; his experiments with the storage battery, 472.
Railway train moved by telegraph signals, first example of, 101.
Randolph, John F., 270.
Rathenau, Emil, his praise of the Edison lighting system, 283, 318, 445.
Rau, Louis, 283.
Rawlins, Wyoming, Edison's trip to, in 1878, 226–231.
Raymond, Henry, 128.
Reiff, J. C., 143.
Reis, Philipp, his make-and-break telephone, about 1860, 170, 172, 173.
Remenyi, his visits at 65 Fifth Avenue, 364.
Ricalton, James, his search for bamboo in India and Japan, 307–314.
Roentgen rays, *see* X-ray.
Rolls, giant and three-high, in Edison's magnetic concentration works, 482–489.
Rosewater, Edward, 60.

S

Santiago, Chile, central station of 1883, 444.
Sawyer and Man, 241.
School, evening, at 65 Fifth Avenue, 374.
Schuckert, 138.
Science, 666.
Scott, G. B., 136.
Scott, Leon, inventor of the phonautograph, 204.

Shaw, Bernard, his interest in the Edison telephone in England, 185, 190.
Shepard, C. S., 434.
Sholes and the typewriter, 145.
Siemens electric railway at Berlin Exhibition of 1879, 453.
Silver Lake chemical works, 557, 558, 562, 678.
Sims, G. C., 406, 422, 684.
Sliding contact in slot, for street railways, Edison's invention, 462.
Snow removal from city streets, Edison's machine for, 584, 585.
Social side of Edison, 741–783.
Southern extravagance, example of, in connection with Edison, 42.
Sprague, Frank J., 138, 427, 440, 453, 462.
Steam-engines, debt of electricity to the high-speed, 397; the Porter engines for electric driving in 1880, 396; development of the Sims type, 406, 421–423; invention of the indicator, 422; of the oil-feed system, 422, 423.
Steamship, the first to be lighted by Edison plant, 447.
Stewart, W. N., 444.
Stieringer, Luther, 266, 438.
Stillwell, Mary E., Edison's first wife, 268.
Stock printer, Dr. S. S. Laws devised a "gold indicator," 118, 130; E. A. Callahan invented a "ticker," 120–122; Edison's invention of a stock ticker in Boston, 110; his effort to sell it in New York, in 1868, 115; his first acquaintance with Doctor Laws and his indicator, 122; Edison made improvements and devised stock tickers, 124, 129, 130–134; the "Universal" ticker, 131, 136, 137; effect of success on Edison's fortunes, he becomes a manufacturer, 132–138; Edison's unison device on stock tickers, 136; details of construction, 787.
Stock-room at the Orange laboratory, 645.
Storage battery, elementary principle of, discovered by Gautherot, 551; the discovery by Planté, 551; the lead-lead type made by Faure in France and Brush in America in 1880, 551, 552; Edison's attitude toward the lead-lead type, 553; interest of Lord Kelvin, 552.
Storage battery, Edison nickel-iron, development of, 554–568; chemical plant established at Silver Lake, New Jersey, 557; names of Edison's associate workers, 558; general outline of work on the battery, 561–564; difficulty of obtaining good electrical contact in the positive element, 564; manufacture of the battery at Glen Ridge, New Jersey, 565; further experiments and the perfection of the nickel-flake idea and process, 566; manufacture of new type begun in 1909, 567; the manufacture of the nickel flake, 567, 568; advantage of the storage-battery street-car, 570; manufacture of battery at Silver Lake and at Orange, 678–680; details concerning battery, 926.
Story, W. F., 35.
Stratford Junction, Canada, Edison as telegraph operator at, 52, 54.
"Subdivision of the electric light," 238, 241, 242, 247.
Sun, eclipse of, Edison's experiment with the tasimeter, 226–231.
Sunbury, Pennsylvania, one of the first central stations on the three-wire system, 425–429, 434.

Swanson, Alfred, 272.
Switch, breakdown, invention of, 426.

T

Tasimeter, invented by Edison, 201, 845; its trial at eclipse of sun in 1878, 226–231.
Telegraph corps, military, service of, General Grant cited, 97.
Telegraph Journal, 666.
Telegraph operator, Edison's first positions as, 50–52; his ingenuity, 54, 56; his travels over the Middle States, 57–97; his work in Boston, 98–113; stories concerning fellow-operators, 75–83.
Telegraph operators, list of well-known Americans, 60; the "tramp operator," 61; stories concerning, 75–83.
Telegrapher, Edison's advertisement in, 128; item in, concerning Edison's duplex telegraphy system, 153.
Telegraphy, early conditions in Europe and America, 1840–1847, 7; first message, "What hath God wrought!" 7; Edison's influence upon the growth of the industry, 691.
Telegraphy, automatic, Little's system, 141, 142; first compound wire, 142; New York-Washington line, 8, 142; new apparatus devised by Edison, 143, 144; printing in Roman letters, 145; speed tests between New York and Charleston, South Carolina, 147; Jay Gould's interest, 147, 160; Edison's partnership with George Harrington, 148; trial of system in England, 148–152; Bain's system, 142; neglect of automatic system, 162; Lord Kelvin's appreciation of Edison's system, 167; details of the system, 810–818.
Telegraphy, duplex, Edison's invention in Boston and test of in Rochester, 115; his experiments in New York, 152; news item in the *Telegrapher*, 153; reference to Edison's invention by Prescott, 154.
Telegraphy, electromotograph, 182, 183, 833.
Telegraphy, phonoplex, 808.
Telegraphy, quadruplex, germ of, in instrument made for George Ellsworth, 94; Edison's work on, in New York, 152; germ of, in the duplex, 154; principles of the quadruplex, 155, 794; difficulties connected with its introduction 157–160; Edison's interest bought by Gould, 159.
Telegraphy, train, Edison's system the forerunner of wireless telegraphy, 576, 900.
Telegraphy, wireless, Edison's early experiments, 576; system applied to moving trains, 576, 577; "etheric force" and Edison's experiments in 1875, 578–580, 819–832.
Telephone exchange, suggested by Theodore Puskas, 179; first exchange at New Haven, Connecticut, 194.
Telephone industry, influence of Edison on growth of, 690.
Telephonograph invented by Edison, 223.
Telephony, influence of the telephone on the telegraph, 58, Edison's alphabetical dial instrument a forerunner of telephony, 112; Reis telephone in 1866, 171–173; name given by Reis, 172; first published account, 173; Bell's patent of 1876, 173, 177, 178; Gray's inventions, 174, 175; Edison's experiments with the Reis transmitter, 173; Edison's device that "could talk" made in 1875, 176; various details, 839; Bell patent litigation,

178, 195; Edison's name on Bell telephone set, 178; Edison's experiments for the Western Union and Mr. Orton, and the development of the carbon transmitter, 179, 180, 182, 183, 839; Judge Brown on the value of the transmitter, 177; Edison's invention of various telephones, 182; the electromotograph, 837; his "chalk receiver" for English telephones, 184; Bell's prophecy concerning telephony, 194; statistics for 1907, 197.
Tesla, Nikola, 283.
Theatre, first lighted from central station by incandescent lamps, 440; first to be lighted by isolated plant, 447.
Third rail, Edison's invention of, 462.
Thomas A. Edison Construction Department, 428.
Thompson, S. P., 552, 580.
Thomson, Frank, 458.
Three-wire system, Edison's invention of, 424; its introduction at Brockton, Massachusetts, and Sunbury, Pennsylvania, 425–434; details of system, 886.
Toledo, Ohio, Edison's experiences as telegraph operator at, 66.
Torpedo, the Edison-Sims dirigible submarine, 587.
Train telegraphy, *see* Telegraphy.
Transmitter, *see* Carbon transmitter.
"Twenty-three," origin of its use as a synonym for "hoodoo," 51.
Twombly, H. McK., 179, 373.
Tyndall, John, on the electric light and its development in Edison's hands, 243, 252.
Typewriter, put into commercial shape by Edison, 146.

U

Underground wires in America, Edison the father of, 388–393; laying the first wires in New York, 398–401.
United States Electric Lighting Co. and the "Filament" patent suit, 721.
Upton, F. R., 276, 277, 281, 296.

V

Vail, J. H., 275, 613.
Vail, T. N., 60.
Vanderbilt, W. H., 373.
Van der Weyde, Dr. P. H., 173.
Van Hoevenbergh, H., 136.
Van Horne, Sir W., 60.
Van Leeuwen, Burgomaster, 473.
Verity, John B., 338.
Victor Hugo Edison, Edison's nickname, 26.
Villard, Henry, 367, 372, 382, 425, 459–463, 469, 754.
Voice-engine invented by Edison, 226.
Vote-recorder, Edison's first invention, 102.

W

Walker, M., 51.
Wallace and his experiments with arc lighting, 247–249.
Webster, Sir Richard, his legal assistance to Edison, in England, 186, 366.
Weekly Herald, a newspaper published by Edison in his boyhood, 33–36, 38, 39.
Weir, L. C., 60, 71.
Western Union Telegraph Co., 157, 159, 160, 195.
Westinghouse, George, awarded the John Fritz gold medal, 346.
Weston, Edward, 631.
Wheeler, S. S., 138.
Whiskey, attempt to age by electricity, by Dr. Bradley, 129.

Williams, Charles, first manufacturer of telephones, 102.
Wireless telegraphy, *see* Telegraphy.
Writing, vertical style, development of, by Edison, 79.
Wynne, Robert J., 60.

X

X-ray, Edison's experiments in 1895, 581; the first fluoroscope made by Edison, 581; first public demonstration, 582, 583.

Y

Yacht, the first to be lighted by Edison plant, 446.

Z

Zoetrope or Wheel of Life, 530, 534.

THE END

00025439

Digitized with financial assistance from

HT Parekh FOUNDATION

An Initiative by HDFC

WITH YOU, RIGHT THROUGH

on 15 October, 2018